IOWADOT
Form 810025 (03-16)

APPLICATION AND AGREEMENT FOR USE OF HIGHWAY RIGHT-OF-WAY FOR UTILITIES ACCOMMODATION

FOR DEPARTMENT USE ONLY

Permit Number	Highway Number	County
77U-2016-106	IA 160	Polk
DOT Project Number: F-160-1(3)--20-77		Expiration/Completion Date: 10-7-17

APPLICANT (INDIVIDUAL OR COMPANY)

First Name	Middle Initial	Last Name	Phone Number	Ext.
David	J	Augspurger	515-725-4604	
Company Name: Iowa Communications Network (ICN)			Phone Number	Ext.

Street Address	City/Town	State	ZIP Code
400 E 14th St	Des Moines	IA	50319

e-Mail Address	Secondary e-Mail Address
david.augspurger@iowa.gov	

INSTALLATION TO BE ACCOMMODATED

Approval is hereby requested to enter within the state highway right-of-way for the accommodation of a utility installation as detailed on the attachments and further described as follows.

The installation shall consist of:

Relocation of approximately 2189-ft of Iowa Communications Network (ICN) and City of Ankeny (joint ICN/Ankeny) fiber optic cable in the north right-of-way of Highway 160 (SE Oralabor Rd) due to road widening and other improvements.

Relocate from existing hand-hole at Station 405+10 (SE Peachtree Dr) easterly via directional bore of 2-in HDPE duct at a typical depth of 6-ft to an existing handhole at Station 426+99 (SE Hulsizer Dr) within the north right-of-way of Highway 160. Directional bore to enter existing hand-hole at Station 413+66. Additional hand-holes to be placed at Stations 419+18 and 422+20.

At Station 413+66, directional bore a 2-in HDPE duct south across (10-ft below) SE Oralabor from the existing hand-hole in the north right-of-way to a new handhole to be place in the south right-of-way alongside the existing walking trail.

and shall be located as shown on the detailed plan attached hereto. **(See current Iowa Department of Transportation Utility Accommodation Policy for submittal of detailed plan requirements.** See Section 115.8 (3).) http://www.iowadot.gov/traffic/pdfs/UtilityPolicy.pdf

WORK SITE LOCATION

The proposed work as described above is located in Section 25, Twp. 80-N, Range 24-W on Highway No. 160 generally located .75 (miles) west (direction) from Interstate 35 (city, county line, or other landmark). Work proposed is more specifically located as being from 1.43 (Milepost #) and 405+10 (Highway Station) to 1.84 (Milepost #) and 426+99 (Highway Station) on the north side of highway.

Disclosure Statement: The information furnished on this form will be used by the Department of Transportation to determine approval or denial of the application. Failure to provide all pertinent information will result in denial of the application. Information furnished is public information and copies may be provided to the public upon request.

The utility company, corporation, applicant, permit holder or licensee, (hereinafter referred to as the Permit applicant) agrees with the Iowa Department of Transportation (hereafter referred to as the Department) that the following stipulations and those special requirements as listed on this document shall govern under this permit after it is approved by the Department.

A. General

1. The installation shall meet the requirements of local municipal, county, state, and federal franchise rules and regulations, regulations and directives of the Iowa State Commerce Commission; the Iowa Department of Natural Resources, all rules and regulations of the Department and any other laws or regulations applicable.
2. The Permit Holder shall be fully responsible for any future adjustments of the facilities within the established highway right-of-way caused by highway construction or maintenance operations.
3. As per Section 115.8(8) of the Utility Accommodation Policy, As-Built plans are due within 90 days after completion of construction, the utility owner shall submit to the district representative an as-built plan.
4. The work described in this permit shall be completed as proposed in compliance with the stipulations and special requirements within one year from the date Department approval is received for said request. Failure on the part of the Permit Holder to abide by the stipulations or in constructing the work described as stipulated and within the time frame stated shall render this agreement and request null and void. The Permit Holder also agrees to save the State of Iowa and the Department harmless of any damages or losses that may be sustained by any person, or persons, on account of the conditions and requirements of this agreement.
5. Non-compliance with any of the terms of the Department's policy, permit, or agreement, may be considered cause for shut-down of construction operations, revocation of the permit, or withholding of relocation reimbursement and/or withholding of future application approvals until compliance is confirmed. The cost of any work deemed necessary to be performed by the State in removal of non-complying construction will be assessed against the Permit Holder.

B. Construction and Maintenance

1. The location, construction and maintenance of the utility installation covered by this application shall be in accordance with the current Department's Utility Accommodation Policy. **http://www.iowadot.gov/traffic/pdfs/UtilityPolicy.pdf**
2. Before beginning any work in the highway right-of-way, it is the responsibility of the Permit Holder to obtain an easement from the drainage district if necessary. The Department assumes no responsibility for advising the Permit Holder of each location of a drainage district crossing. It is the Permit Holder's responsibility to locate these crossings and obtain any necessary easements or permission from the drainage district. See Code of Iowa, Chapter 468 for additional information.
3. A copy of the approved permit shall be available on the job site at all times for examination by Department personnel.
4. Operations in the construction and maintenance of this utility installation shall be carried on in such a manner as to cause minimum interference to or distraction of traffic on said highway.
5. Traffic protection shall minimally be in accordance with Part VI of the current Manual on Uniform Traffic Control Devices for Streets and Highways. The applicant shall be responsible for correctly using traffic control devices including signs, warning lights, and channelizing devices as needed while work is in progress or the clear zone is impacted. Flagging operations are the responsibility of the applicant. The Department's TC XXX Series Standards are the preferred traffic control specification plans. **http://www.iowadot.gov/design/stdplne_tc.htm**
6. The applicant shall seed and mulch all disturbed areas within the highway right-of-way and shall be responsible for the vegetative cover until it becomes well established. Any surfaced areas such as driveways or shoulders and sodded waterways and plantings which are disturbed shall be restored to their original condition. Any damage to any other underground facilities during installation shall be repaired at the permit holder's expense.
7. All personnel in the highway right-of-way shall wear ANSI 107 Class 2 apparel at all times when exposed to traffic or construction equipment.
8. As per Policy Section 115.4(9) parking or storage in the clear zone is prohibited. When not in actual use, vehicles, equipment and materials shall not be parked or stored within the clear zone or median.
9. Unless specifically noted in Special Requirements section, all work performed within the right-of-way shall be restricted to 30 minutes after sunrise to 30 minutes before sunset.
10. Pedestals shall be placed within 12 inches of the right-of-way line.
11. All above and below ground appurtenances (pedestals, hydrants, drains, accesses, etc.) shall be marked with high visibility posts and signs. The minimum height requirement for the signs shall be 5 foot. Urban Roadway Sections may be exempted with department approval.

C. Liability

1. To the extent allowable by law, the Permit Holder agrees to indemnify, defend, and hold the Department harmless from any action or liability arising out of the design, construction, maintenance, placement of traffic control devices, inspection, or use of the Permit Holder's facilities. This agreement to indemnify, defend, and hold harmless applies to all aspects of the Department's application review and approval process, plan and construction reviews, and funding participation.
2. The Permit Holder shall indemnify and save harmless the State of Iowa, its agencies and employees, from any and all causes of action, suits at law or in equity, for losses, damages, claims or demands, and from any and all liability and expense of whatsoever nature, arising out of or in connection with the Permit Holder's use or occupancy of the public highway.
3. The State of Iowa and the Department assume no responsibility for damages to the Permit Holder's property occasioned by any construction or maintenance operations on said highway if the facilities are not located in accordance with this permit.
4. The State of Iowa, its agencies or employees, will be liable for expense incurred by the Permit Holder in its use and occupancy of the highway right-of-way only when negligence of the State, its agencies or employees, is the sole proximate cause of such expense. Whether in contract, tort or otherwise, the liability of the State, its agencies and employees, is limited to the reasonable, direct expense to repair damaged utilities, and in no event will such liability extend to loss of profits or business, indirect, special, consequential or incidental damages.

D. Notification

1. The Permit Holder is responsible for contacting **Iowa One-Call (1-800-292-8989)** and request the location of all underground utilities forty-eight (48) hours before excavation. Before beginning work in the highway right-of-way, the Permit Holder shall also contact any other known utility located in the area of the proposed work.
2. The Permit Holder agrees to give the Department forty-eight (48) hour notice of its intention to start construction or to perform routine maintenance on the highway right-of-way. Said notice shall be made to the local DOT contact person whose name is shown on Page 3.
3. **511 Notification-**In accordance with Iowa Code section 321.348, cities and utilities **may not obstruct or close** primary highways or primary highway extensions (State highways within city limits) **without prior consent of the Iowa DOT**, except in emergency situations. Before setting up a lane closure or a vertical/horizontal restriction of any kind on a primary highway, call your local Iowa DOT Maintenance garage and call the Traffic Management Center per attached documents. Except in emergency situations, a 10 day advance notice is required.
http://www.iowadot.gov/traffic/utility/pdfs/511UtilityNotification.pdf

E. Buy America

Buy America applies to relocations of utility facilities that must move due to highway projects under certain specific conditions that include reimbursable locations and relocations due to interstate projects.
Please contact the Department's District Engineering Operation Technician (EOT) for more information on Buy America requirements or visit the following link: **http://www.iowadot.gov/traffic/utility/utility.html**

Permit Number: _____

FOR DEPARTMENT USE ONLY

Special Requirements - in addition to the stipulations above, the following special requirements shall apply to this permit:

Applicant Signature and Agreement

The undersigned have read the stipulations of this permit agreement as stated, as well as attachments which may be included, and by signing this application agree to abide by all stipulations and to complete the work as proposed in compliance with the stipulations and attachments within one year from the date Department approval is granted for said request. Failure on the part of the applicant to abide by the stipulations or to construct the work desired as stipulated and within the time frame stated shall render this agreement and request null and void. The undersigned also agrees to save harmless the State of Iowa and the Iowa Department of Transportation from any damage or losses that may be sustained by any person or persons on account of the conditions and requirements of this agreement.

Name of Agent *(Print or Type)*	Agent/Owner *(Signature)*	Title
David J. Augspurger		Telecom Engineer Sr
Name of Owner *(Print or Type)*		Date
Iowa Communications Network (ICN) - State of Iowa		10-7-16
e-Mail Address		
david.augspurger@iowa.gov		

CITY ACTION (IF PROPOSED WORK IS WITHIN AN INCORPORATED CITY, CITY ACTION IS REQUIRED)

"The undersigned city joins in the grants embodied in the above permit executed by the Iowa Department of Transportation on condition that all of the covenants and undertakings therein running to the Iowa Department of Transportation shall inure to the benefit of the undersigned city and recommends action on said permit application as noted below by the delegated city official".

☐ **Recommend Approval** ☐ **Do Not Recommend Approval** ☐ **None Required**

Handwritten Signature	Title	Date
Type or Print Name	Authorized Official for the City of	
e-Mail Address		

COUNTY ACTION (IF PROPOSED WORK CROSSES COUNTY RIGHT-OF-WAY, COUNTY ACTION IS REQUIRED)

"The undersigned county joins in the grants embodied in the above permit executed by the Iowa Department of Transportation on condition that all of the covenants and undertakings therein running to the Iowa Department of Transportation shall inure to the benefit of the undersigned county and recommends action on said permit application as noted below by the delegated county official".

☐ **Recommend Approval** ☐ **Do Not Recommend Approval** ☒ **None Required**

Handwritten Signature	Title	Date
Type or Print Name	Authorized Official for the County of	
e-Mail Address		

FEDERAL HIGHWAY ADMINISTRATION ACTION (WHEN REQUIRED)

☐ **Recommend Approval** ☐ **Do Not Recommend Approval** ☒ **None Required**

Authorized FHWA Representative Signature	Date

DEPARTMENT OF TRANSPORTATION FINAL ACTION

☒ **Application Approved** ☐ **Application Denied** Permit Number: 770-2016-106

Authorized Highway District Representative	Signature	Date
Jeffrey Cunningham	Jeffrey Cun	10-7-16
e-Mail Address		
jeffrey.Cunningham@dot.iowa.gov		

Notice of intention to commence activities on the highway rights-of-way shall be submitted by the applicant a minimum of 48 hours prior to actually commencing the activities as herein granted by this approved application. Notice is to be given to the following Iowa Department of Transportation representative. Except in emergencies a 10 day advance notice is required for lane restrictions of any kind:

Local DOT Contact Person (Type or Print Name)		Phone Number	
Eric Lack		515-265-1614	
Street Address	City/Town	State	ZIP Code
1530 NE 53rd Ave	Des Moines	IA	50313
e-Mail Address			
eric.lack@dot.iowa.gov			

Permit Number: _____

IOWA DOT

SMARTER I SIMPLER I CUSTOMER DRIVEN

www.iowadot.gov

District One
Des Moines Area Engineer's Office
2300 SE 17th Street
Grimes, Iowa 50111

515-986-5461
Fax: 986-5735

October 7, 2016

Permit 77U-2016-106

Iowa Communications Network
Attn: David Augspurger
400 E 14th Street
Des Moines, IA 50319

Enclosed is a copy of approved permit number 77U-2016-106, Application and Agreement for use of Highway Right of Way for Utilities Accommodation, for Relocating utilities for City of Ankeny widening project. at stations 405+10 to 426+99 on IA 160.

Please note the stipulations and changes that we may have made since the permit was submitted.

A copy of this permit must be at the work site at all times while work is in progress.

If you have any questions, please feel free to call.

Sincerely,

Jeffrey Cunningham

Attachments
JC/jc.
Cc: Bryan Bradley, IDOT 800 Lincoln Way Ames IA, 50010
Eric Lack, IDOT 1530 NE 53rd Ave Des Moines IA 50313
Mark Mueller, City of Ankeny 220 West First Street Ankeny IA 50023
File

Special Requirements:

All Material or equipment shall be kept 10 feet off the Right of Way during non-working hours.

No hole shall remain open within the Right of Way during non-working hours.

Right of Way shall be restored immediately upon completion of project.

No parking on shoulders.

No digging into side slopes of any road or highway shall be allowed.

Proper traffic control shall be used at all times.

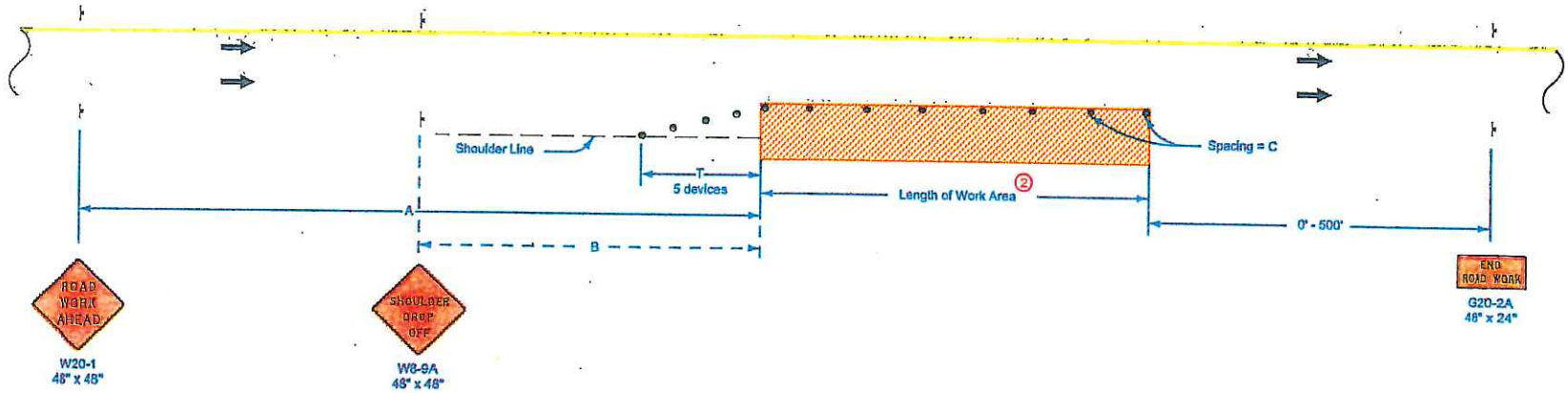

LEGEND

- Traffic Sign
- 42" Channelizer
- Work Area
- Direction of Traffic

SPEED LIMIT (mph)	A	B	C (2)	T
40 or less	500'	250'	40'	100'
45 - 50	700'	350'	80' (1)	200'
55 - 60	1500'	500'	100' (1)	200'
65 - 70	1500'	500'	100' (1)	230'

When a pavement edge drop-off exists, install a SHOULDER DROP-OFF sign.

No pavement edge drop-offs greater than pavement depth will be allowed during non-working hours.

Shoulder edge drop-offs shall be mitigated according to Article **1107.08.L2** of the Standard Specifications.

(1) When the length of a pavement edge drop-off is 1000 feet or less, the temporary fillet requirement of Article **1107.08** of the Standard Specifications does not apply. Reduce channelizer spacing to 40 feet.

(2) For work areas less than 200 feet long, use channelizers spaced at 20 foot centers or use a vehicle with an amber revolving light or amber strobe light.

Possible Contract Item:
Traffic Control

Iowa Department of Transportation

STANDARD ROAD PLAN

REVISION 7 10-15-13

TC-402

SHEET 1 of 1

REVISIONS: Modified circle note 1.

Brian Smith
APPROVED BY DESIGN METHODS ENGINEER

SHOULDER CLOSURE (MULTI-LANE)

Minimum Policy Requirements
Urban Section
Non - Freeway Highway

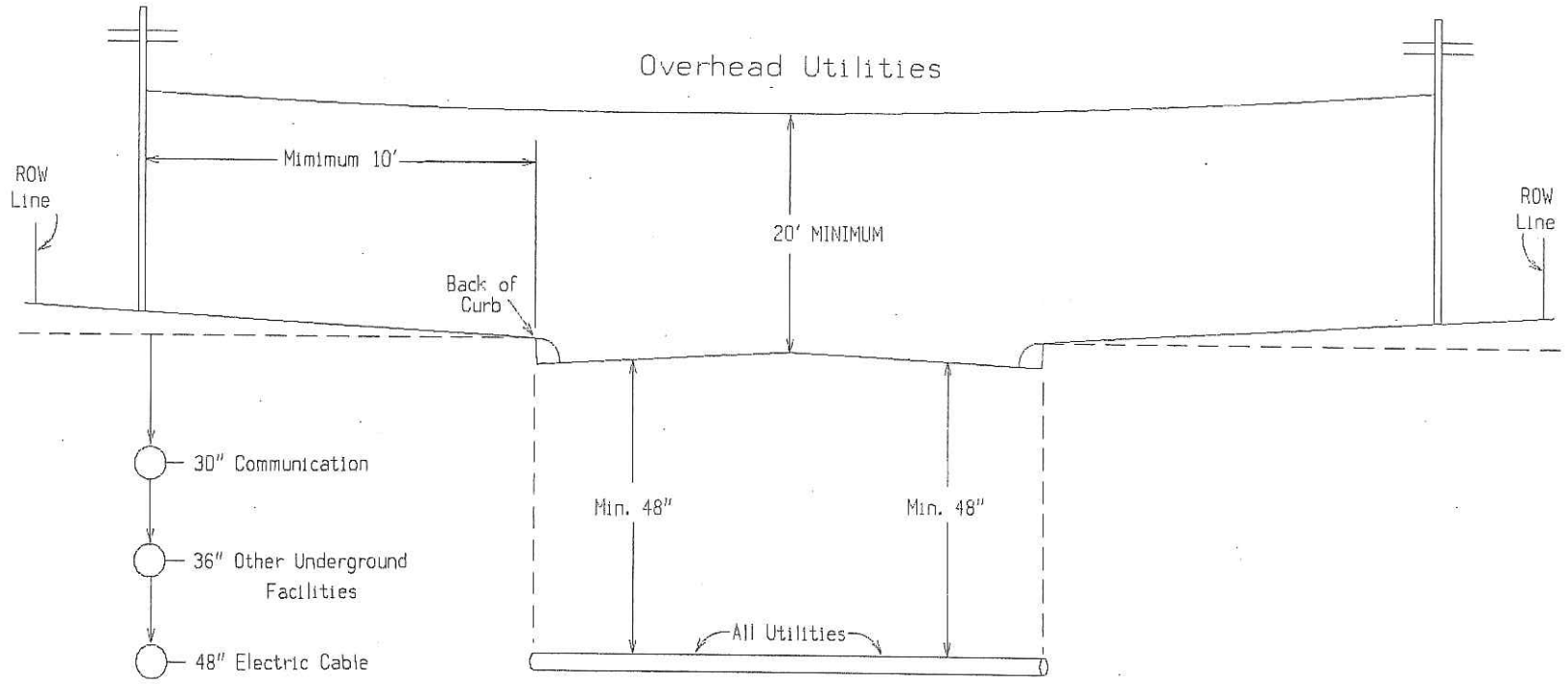

Notes:
Utilities shall be located between back of curb and the highway row.
Utilities should be located as near to the highway row line as practical.
See Utility Policy, Section 115.13 for further details.

Acceptable Clear-zone Distances (feet).

design speed	design ADT	FORESLOPES			BACKSLOPES		
		6:1 or flatter	Steeper than 6:1, up to and including 4:1	Steeper than 4:1	Steeper than 4:1*	4:1 or flatter, up to 6:1	6:1 or flatter
40 mph or less	ADT < 750	7	7	**	7	7	7
	750 ≤ ADT < 1500	10	12	**	10	10	10
	1500 ≤ ADT < 6000	12	14	**	12	12	12
	ADT ≥ 6000	14	16	**	14	14	14
45 – 50 mph	ADT < 750	10	12	**	8	8	10
	750 ≤ ADT < 1500	14	16	**	10	12	14
	1500 ≤ ADT < 6000	16	20	**	12	14	16
	ADT ≥ 6000	20	24	**	14	18	20
55 mph	ADT < 750	12	14	**	8	10	10
	750 ≤ ADT < 1500	16	20	**	10	14	16
	1500 ≤ ADT < 6000	20	24	**	14	16	20
	ADT ≥ 6000	22	26	**	16	20	22
60 mph	ADT < 750	16	20	**	10	12	14
	750 ≤ ADT < 1500	20	26	**	12	16	20
	1500 ≤ ADT < 6000	26	30	**	14	18	24
	ADT ≥ 6000	30	30	**	20	24	26
65 – 70 mph	ADT < 750	18	20	**	10	14	14
	750 ≤ ADT < 1500	24	28	**	12	18	20
	1500 ≤ ADT < 6000	28	30	**	16	22	26
	ADT ≥ 6000	30	30	**	22	26	28

* Backslopes as steep as 2.5:1 can be considered as part of the clear zone, as long as they are relatively smooth and do not contain any fixed objects. Refer to Section 8A-4 of the Design Manual for information regarding backslopes steeper than 2.5:1.

** Since a vehicle traveling on a slope steeper than 4:1 is likely to be diverted to the bottom of the slope, the width of any slope steeper than 4:1 cannot be counted in the clear zone determination. Refer to Section 8A-2 of the Design Manual for information on providing clear recovery areas at the base of steep slopes.

Table 2601.03-1: Rural Stabilizing Crop Seeding Rates and Schedule

March 1 through October 31	
Oat Grain rye Canada wildrye (Elymus canadensis)	50 lbs. per acre (56 kg/ha) 50 lbs. per acre (56 kg/ha) 5 lbs PLS. per acre (6 kg/ha)
November 1 through February 28 (or 29)	
Oat Grain rye Canada wildrye (Elymus canadensis)	62 lbs. per acre (69 kg/ha) 62 lbs. per acre (69 kg/ha) 7 lbs. PLS. per acre (8 kg/ha)
For stabilizing crop only, Canada wildrye (Elymus canadensis) seed will not be required to be certified as Source Identified Class (Yellow Tag) Source 60-Iowa.	
Canada wildrye (Elymus canadensis) seed shall be debearded or equal to facilitate application of seed.	

Table 2601.03-2: Urban Stabilizing Crop Seeding Rates

Bluegrass, Kentucky	122 lbs. per acre (137 kg/ha)
Ryegrass, Perennial (fineleaf variety)	35 lbs. per acre (39 kg/ha)
Fescue, Creeping Red	18 lbs. per acre (20 kg/ha)

Table 2601.03-3: Permanent Seed Rates, Rural Areas

Fescue, Tall (Fawn)	100 lbs. per acre (112 kg/ha)
Ryegrass, Perennial (Linn)	75 lbs. per acre (84 kg/ha)
Bluegrass, Kentucky	20 lbs. per acre (22 kg/ha)

Table 2601.03-4: Permanent Seed Rates, Urban Areas

Bluegrass, Kentucky	122 lbs. per acre (137 kg/ha)
Ryegrass, Perennial (fineleaf variety)	35 lbs. per acre (39 kg/ha)
Fescue, Creeping Red	18 lbs. per acre (20 kg/ha)

HANDHOLE PLACEMENT TYPICAL

24" X 36" X 30" NEW BASIS HAND HOLE

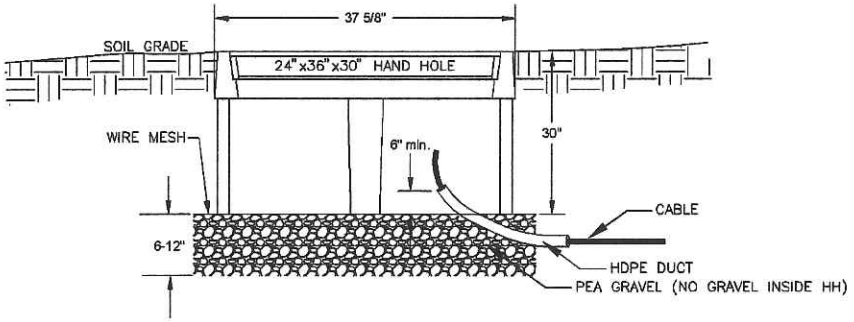

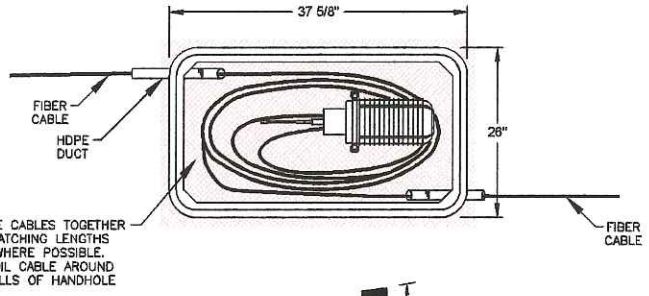

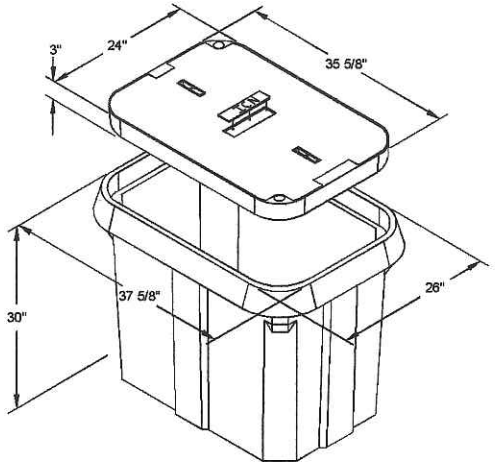

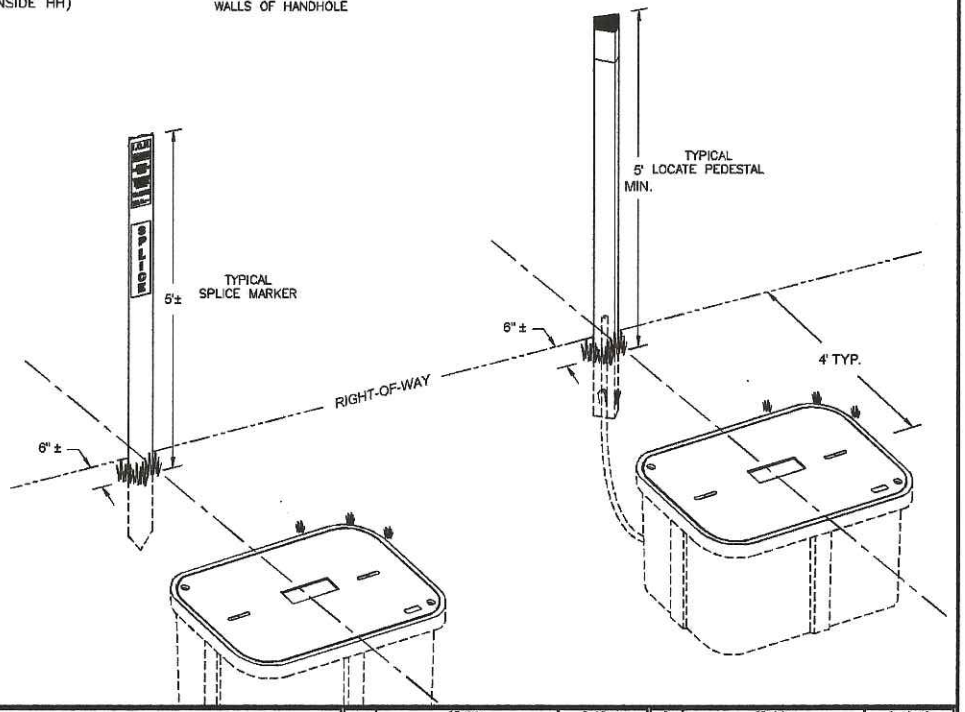

IOWA COMMUNICATIONS NETWORK GRIMES STATE OFFICE BUILDING 400 EAST 14TH STREET DES MOINES, IOWA 50319 ICN© 2014, COPY WITH PERMISSION	THIS DRAWING IS PROVIDED FOR GENERAL INFORMATION ONLY AND IS NOT TO BE USED TO DETERMINE PRECISE ICN PLACEMENT. CALL ONE CALL BEFORE EXCAVATION (1-800-292-8989 OR 811)	CONSTRUCTION DETAIL HANDHOLE TYPICAL – NEW BASIS PC243630SN20 24" x 36" x 30" TYPICAL HANDHOLE | SCALE: NONE | SIZE: 11 x 17

1	REVISION	3-27-12	5	REVISION	8-19-16		
2	REVISION	7-16-14	6				
3	REVISION	11-10-14	7				
4	REVISION	8-21-15	8				

O:\AutoCAD Standards\TYPICALS\TYPICAL-HH PLACEMENT.dwg

IOWA
COMMUNICATIONS
NETWORK

POLK COUNTY

RELOCATE 2189'± OF ICN AND JOINT ICN/ANKENY CABLE DUE TO ROAD RECONSTRUCTION (WIDENING) OF IOWA HIGHWAY 160 (SE ORALABOR RD) IN ANKENY, IOWA

ICN Project # 77162503

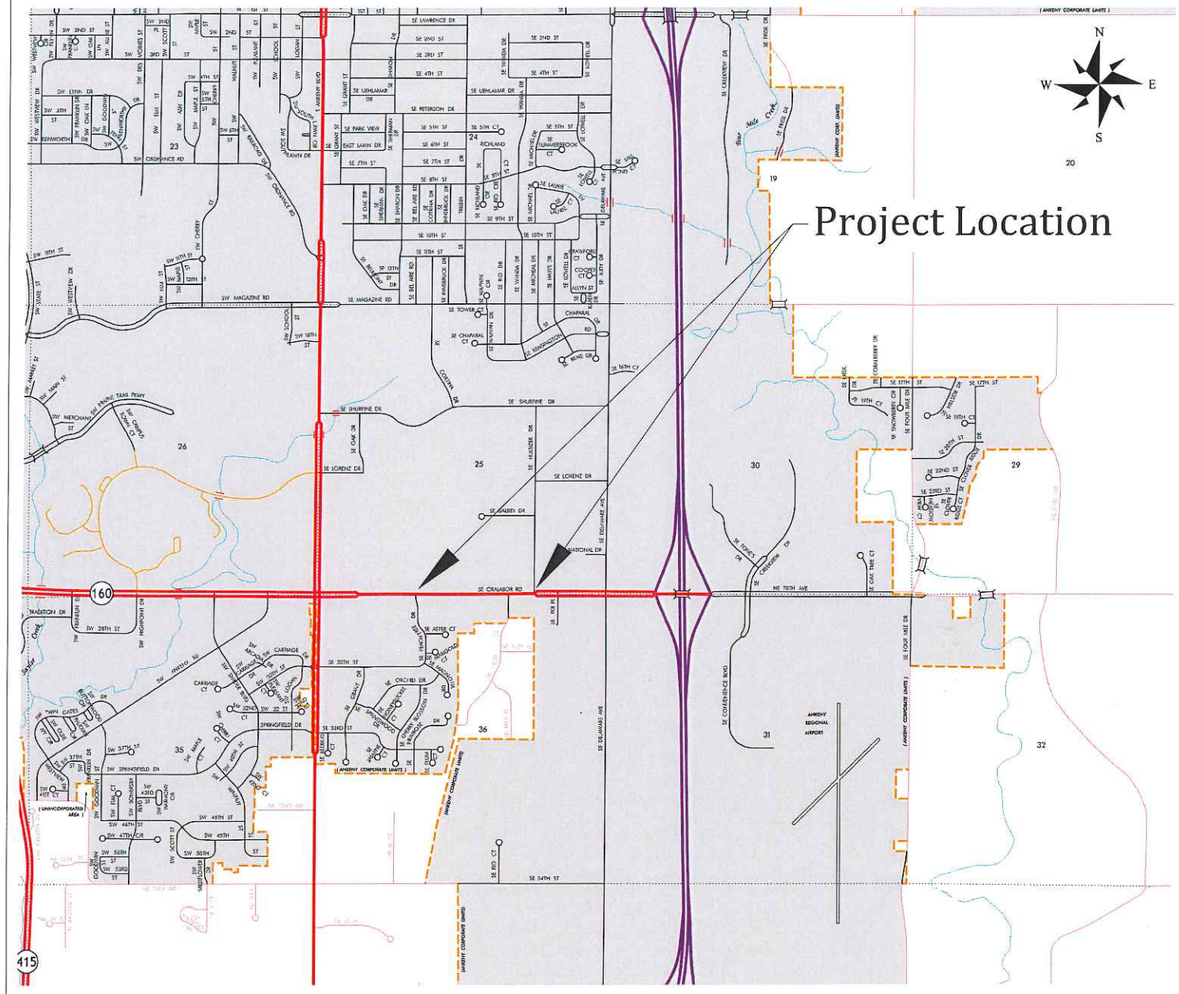

IOWA ONE CALL
1-800-292-8989
www.iowaonecall.com

Friday, October 07, 2016

Relocate 2189'± of joint-ICN/Ankeny cable from existing HH at 405+10 (SE Peachtree Dr) easterly via directional bore of 2-in HDPE at a typical depth of 6-ft to an existing HH at 426+99 (SE Hulsizer Dr) within the north right-of-way of Highway 160. Directional bore to enter existing handhole at Station 413+66. Additional handholes to be placed at Stations 419+18 and 422+20.

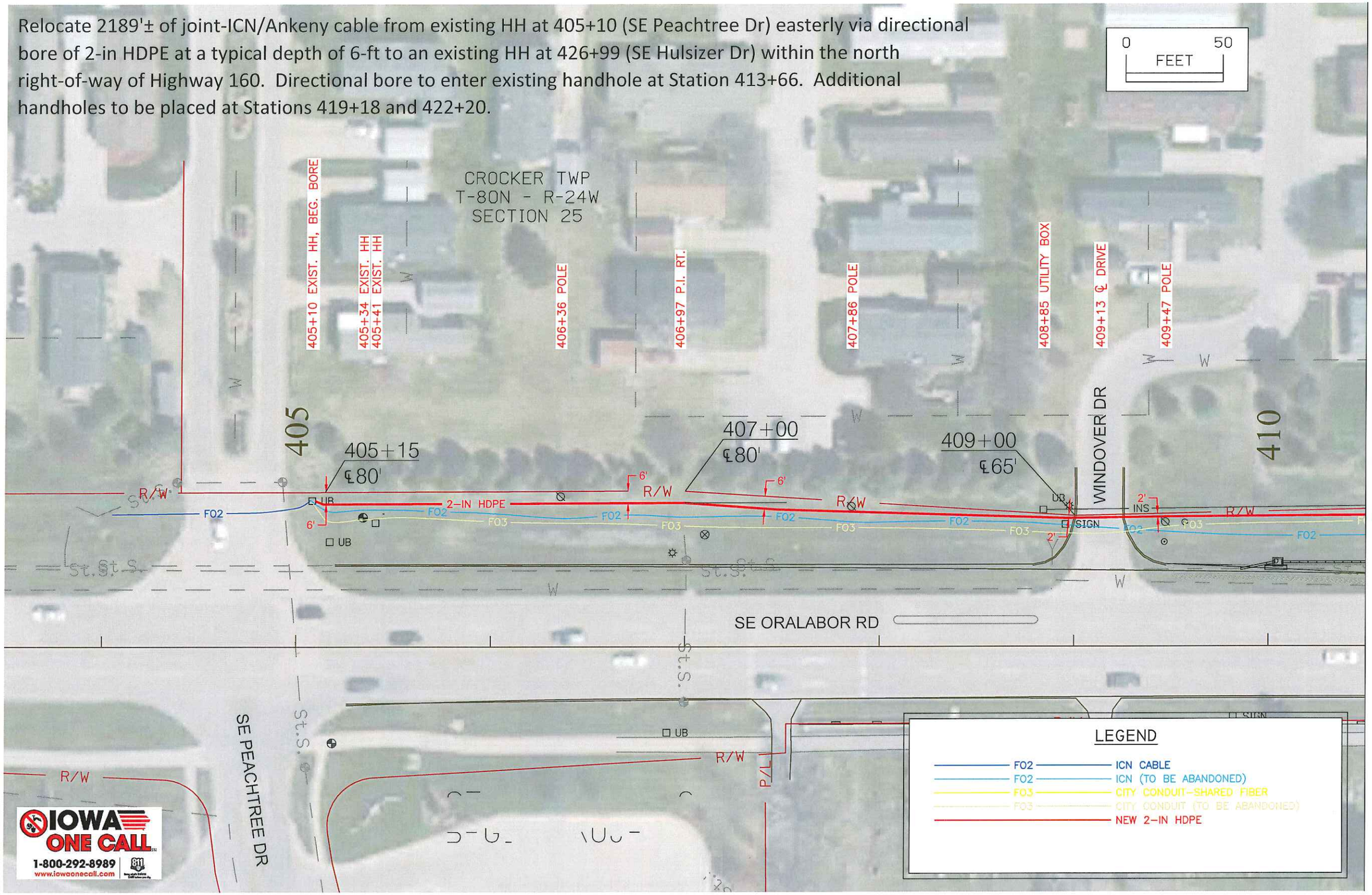

IOWA COMMUNICATIONS NETWORK GRIMES STATE OFFICE BUILDING 400 EAST 14TH STREET DES MOINES, IOWA 50319 ICN© 2014, COPY WITH PERMISSION	THIS DRAWING IS PROVIDED FOR GENERAL INFORMATION ONLY AND IS NOT TO BE USED TO DETERMINE PRECISE ICN PLACEMENT. CALL ONE CALL BEFORE EXCAVATION (1-800-292-8989 OR 811)	Ankeny: Oralabor Relocation PAGE 1 | SCALE: 1"=50' | SIZE: 11 x 17 | W:\OSP\OSP PROJECTS\AUGSPURGER\Polk County\77162503 – Ankeny – Oralabor Widening\Relo\Oralabor Relocation Final.dwg

1	PERMIT	10-7-16	5		
2			6		
3			7		
4			8		

At Station 413+66, directional bore a 2-in HDPE duct south across (10-ft below) SE Oralabor from the existing handhole in the north right-of-way to a new handhole to be place in the south right-of-way alongside the existing walking trail.

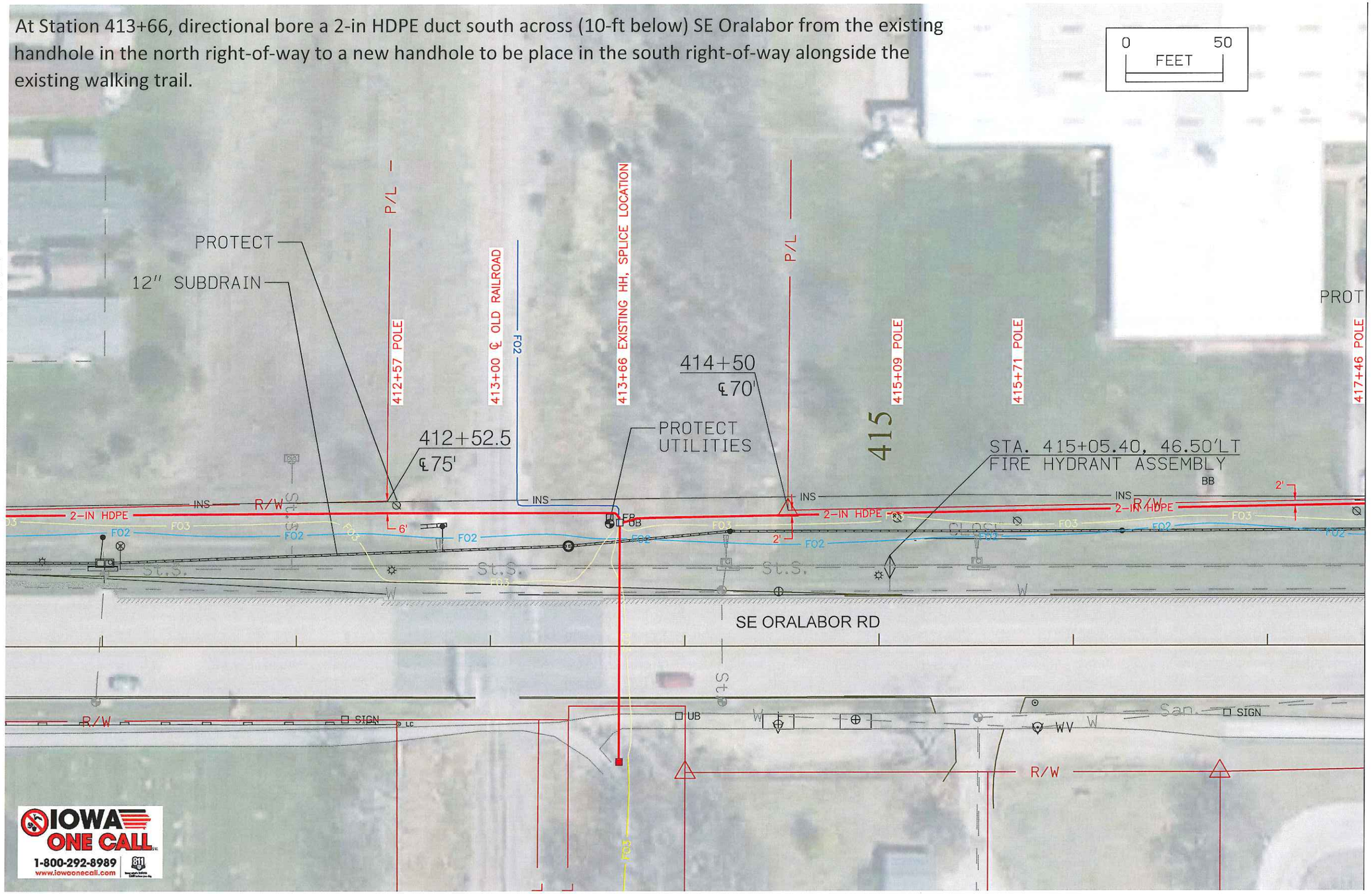

IOWA COMMUNICATIONS NETWORK
GRIMES STATE OFFICE BUILDING
400 EAST 14TH STREET
DES MOINES, IOWA 50319
ICN© 2014, COPY WITH PERMISSION

THIS DRAWING IS PROVIDED FOR GENERAL INFORMATION ONLY AND IS NOT TO BE USED TO DETERMINE PRECISE ICN PLACEMENT. CALL ONE CALL BEFORE EXCAVATION (1-800-292-8989 OR 811)

Ankeny: Oralabor Relocation

1	PERMIT	10-7-16	5		
2			6		
3			7		
4			8		

PAGE 2 | SCALE: 1"=50' | SIZE: 11 x 17 | W:\OSP\OSP PROJECTS\AUGSPURGER\Polk County\77162503 – Ankeny – Oralabor Widening\Relo\Oralabor Relocation Final.dwg

Relocate 2189'± of joint-ICN/Ankeny cable from existing HH at 405+10 (SE Peachtree Dr) easterly via directional bore of 2-in HDPE at a typical depth of 6-ft to an existing HH at 426+99 (SE Hulsizer Dr) within the north right-of-way of Highway 160. Directional bore to enter existing handhole at Station 413+66. Additional handholes to be placed at Stations 419+18 and 422+20.

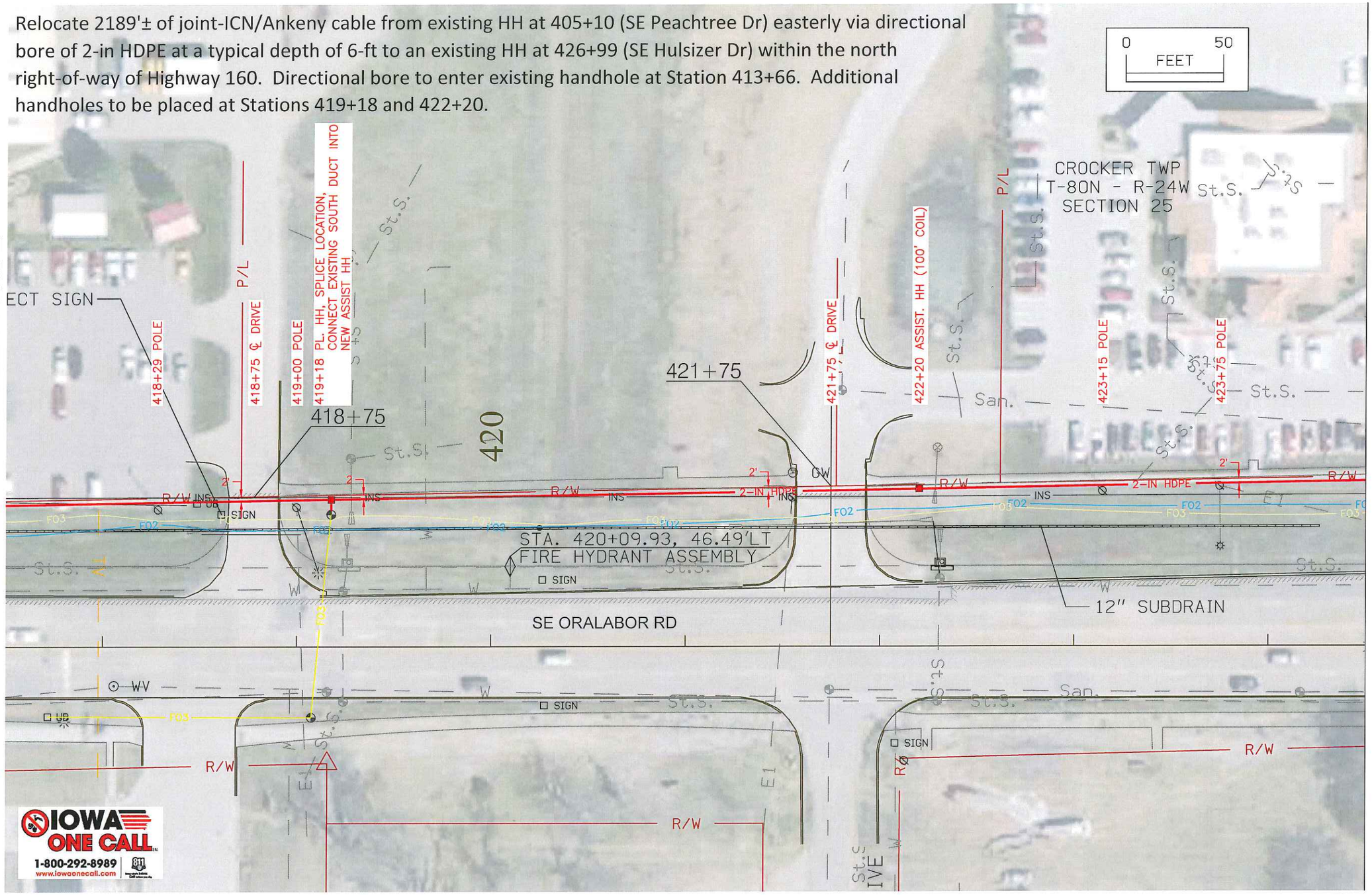

IOWA COMMUNICATIONS NETWORK GRIMES STATE OFFICE BUILDING 400 EAST 14TH STREET DES MOINES, IOWA 50319 ICN© 2014, COPY WITH PERMISSION	THIS DRAWING IS PROVIDED FOR GENERAL INFORMATION ONLY AND IS NOT TO BE USED TO DETERMINE PRECISE ICN PLACEMENT. CALL ONE CALL BEFORE EXCAVATION (1-800-292-8989 OR 811)	Ankeny: Oralabor Relocation			
		PAGE 3	SCALE: 1"=50'	SIZE: 11 x 17	W:\OSP\OSP PROJECTS\AUGSPURGER\Polk County\77162503 – Ankeny – Oralabor Widening\Relo\Oralabor Relocation Final.dwg

1	PERMIT	10-7-16	5		
2			6		
3			7		
4			8		

Relocate 2189'± of joint-ICN/Ankeny cable from existing HH at 405+10 (SE Peachtree Dr) easterly via directional bore of 2-in HDPE at a typical depth of 6-ft to an existing HH at 426+99 (SE Hulsizer Dr) within the north right-of-way of Highway 160. Directional bore to enter existing handhole at Station 413+66. Additional handholes to be placed at Stations 419+18 and 422+20.

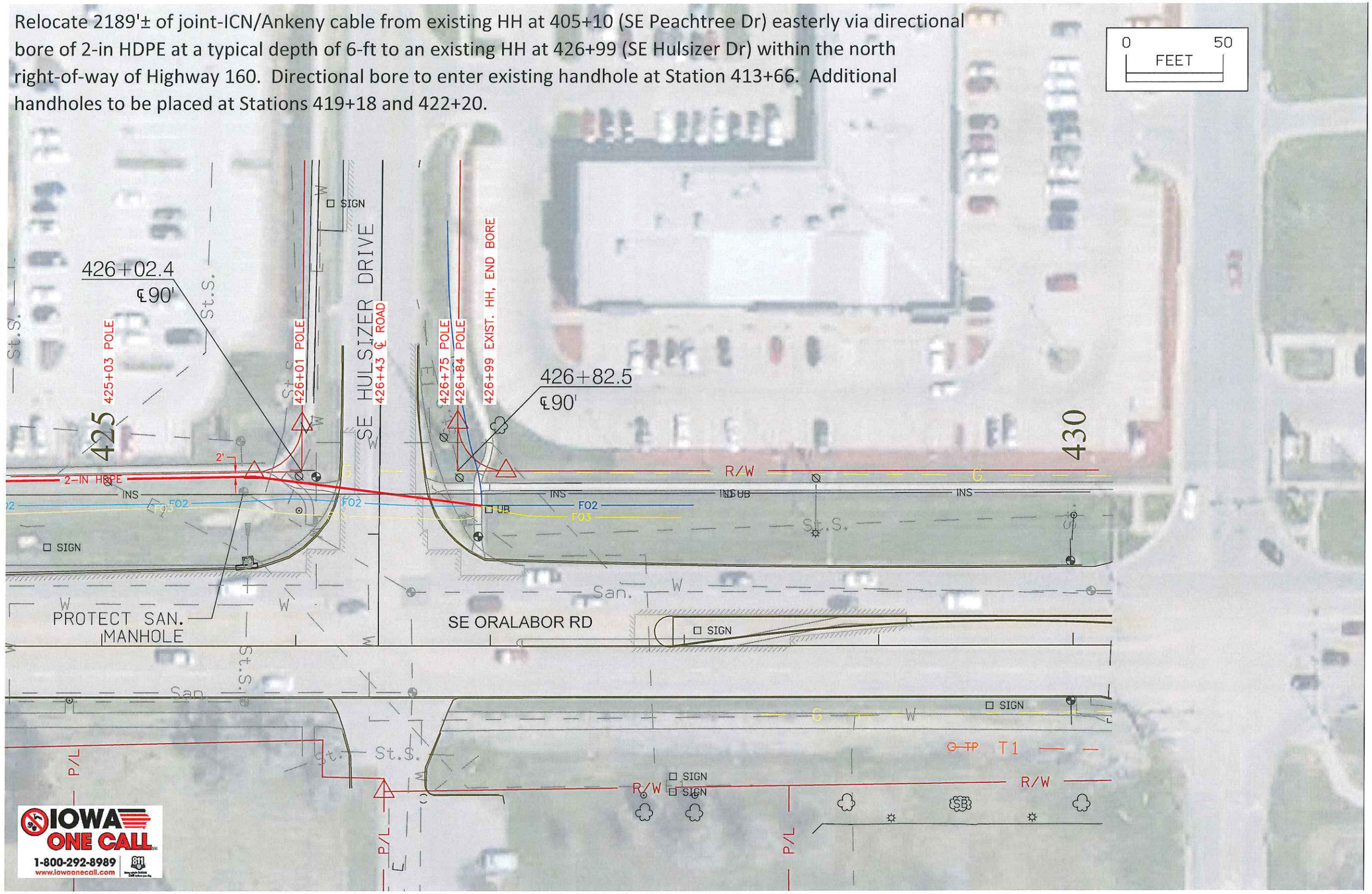

IOWA COMMUNICATIONS NETWORK GRIMES STATE OFFICE BUILDING 400 EAST 14TH STREET DES MOINES, IOWA 50319 ICN© 2014, COPY WITH PERMISSION	THIS DRAWING IS PROVIDED FOR GENERAL INFORMATION ONLY AND IS NOT TO BE USED TO DETERMINE PRECISE ICN PLACEMENT. CALL ONE CALL BEFORE EXCAVATION (1-800-292-8989 OR 811)	Ankeny: Oralabor Relocation PAGE 4 | SCALE: 1"=50' | SIZE: 11 x 17 | W:\OSP\OSP PROJECTS\AUGSPURGER\Polk County\77162503 – Ankeny – Oralabor Widening\Relo\Oralabor Relocation Final.dwg

1	PERMIT	10-7-16	5		
2			6		
3			7		
4			8		

NOTES: 1. THE ADJUSTMENT OF FIXTURES AND MANHOLES SEE SHEET 5K

2. POWER POLES, GAS LINES AND TELEPHONE LINES TO BE RELOCATED BY OTHERS.

1 EVELYN E. MILLER
2 ROBERT MANDELBAUM
3 UNITED EQUITY INVESTMENT CORP
4 MILLER & SON INVESTMENTS
5 VERN & WILMA COLES
7 CHICAGO & NORTHWESTERN RR

BM #39A - STA. 402+93, LEFT, TOP CENTER BOLT FIRE HYDRANT - EL. 967.63

BM #39B - STA. 408+94, LEFT, TOP CENTER BOLT FIRE HYDRANT - EL. 966.15

REFERENCE FOR P.I. STA. 399+94.53 (BACK) = STA. 400+00 (AHEAD)

CUT 8068

FILL + 30% 4874
TO ENTRANCES 1032
WASTE 2162
8068

ORALABOR CEMETERY

Symbol	Description of Revisions	Date	Approved
4	AS-BUILT	18 AUG 1989	
3	Modified Gas Line Location	10-31-88	
2	AMD #1 "ADDED" ENT. 409+13.52 LT. P-33 & P-34		
1	Revised Earth work summary		
	Revised Property No. 2 & 4 Drive Minor Change	4-22-86	

SHIVE-HATTERY ENGINEERS
Cedar Rapids • Iowa City • Waterloo
Des Moines • Dubuque • Davenport • Rock Island

PREPARED BY: U. S. ARMY ENGINEER DISTRICT, ROCK ISLAND, CORPS OF ENGINEERS, ROCK ISLAND, ILLINOIS

Designed by: R.L.T.
Drawn by: D.E.I. & R.L.B.
Checked by: M.K.S.
Reviewed by: SAMUEL S. DOAK
Approved by: DOYLE W. McCULLY

US Army Corps of Engineers

SAYLORVILLE LAKE
IOWA HIGHWAY 415
SEGMENT B - PART II

STA. 399+51 TO STA. 412+00
PLAN & PROFILE

Scale: AS SHOWN
Date: 3-18-86
Drawing Code: SR-92
Sheet reference number:
REQUEST FOR PROPOSAL DACW-25-86-R-0046
Sheet 4 of 55

PROJECT NUMBER	STATE	FED. ROAD DIST. NO.	FISCAL YEAR	SHEET NO.	TOTAL SHEETS
	IOWA	8		4	55

COUNTY

IOWA DOT PROJECT RELOCATED 160 POLK COUNTY PROJECT NO. F-160-1(3)--20-77

I.D.O.T. # 000-316980

BRUNING 44-132 479456

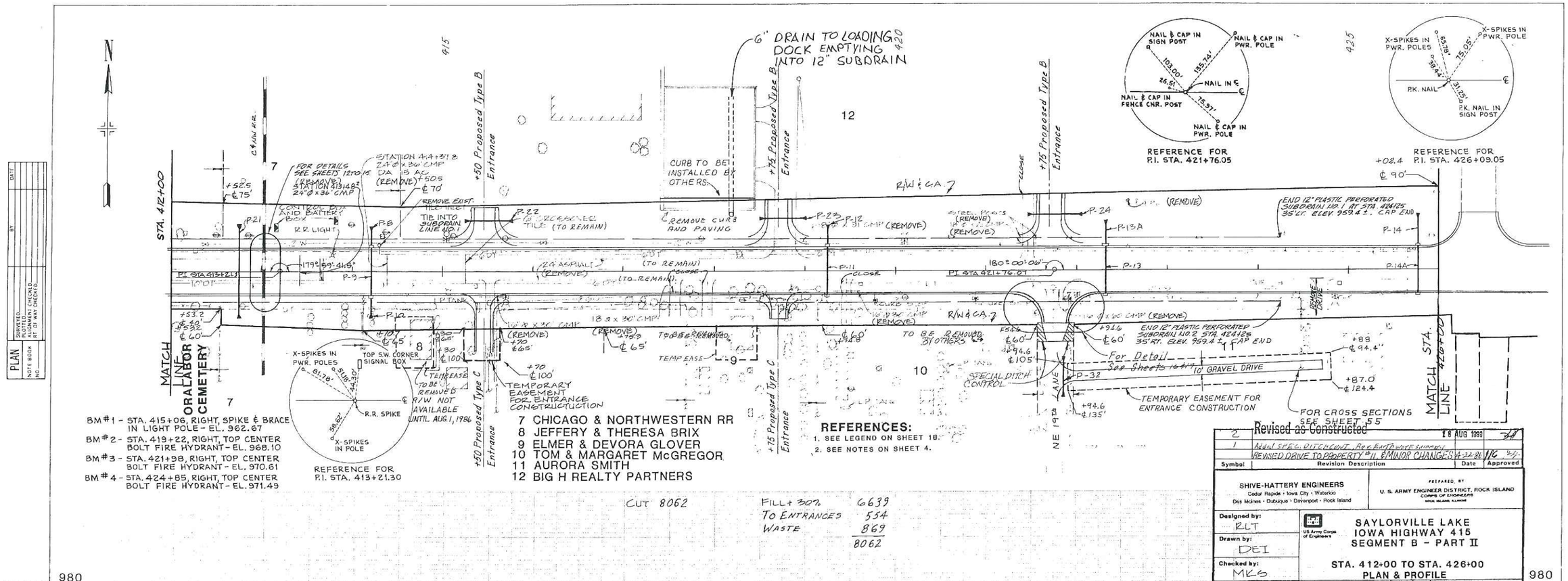

Symbol	Revision Description	Date	Approved
2	~~Revised as Constructed~~	18 AUG 1989	
1	Addnl SPEC. DITCHCONT., RR & ENT PAVING SUMMARY, REVISED DRIVE TO PROPERTY #11, MINOR CHANGES 4-22-86	1/6	

SHIVE-HATTERY ENGINEERS
Cedar Rapids • Iowa City • Waterloo
Des Moines • Dubuque • Davenport • Rock Island

PREPARED BY U. S. ARMY ENGINEER DISTRICT, ROCK ISLAND CORPS OF ENGINEERS ROCK ISLAND, ILLINOIS

Designed by: RLT
Drawn by: DEI
Checked by: MKS
Reviewed by: SAMUEL S. DOAK
Approved by: DOYLE W. McCULLY

US Army Corps of Engineers

SAYLORVILLE LAKE
IOWA HIGHWAY 415
SEGMENT B - PART II

STA. 412+00 TO STA. 426+00
PLAN & PROFILE

Scale: AS SHOWN
Date: 3-18-86
Drawing Code: SR-92
Sheet reference number:
REQUEST FOR PROPOSAL DACW-25-86-R-0048
Sheet 5 of 55

PLAN: SURVEYED, PLOTTED, CROSS CHECKED, NOTE BOOK, NO., BY, DATE
PROFILE: SURVEYED, PLOTTED, CROSS CHECKED, NOTE BOOK, NO., BY, DATE, STRUCTURE NO. & MAT'L NOTED, CH'KD

PROJECT NUMBER	STATE	FED. ROAD DIST. NO.	FISCAL YEAR	SHEET NO.	TOTAL SHEETS
	IOWA	8		5	55

IOWA DOT PROJECT RELOCATED 160 POLK COUNTY PROJECT NO. F-160-1(3)--20-77

BRUNING 46-132 4794-5-6
I.D.O.T. # 000-316980

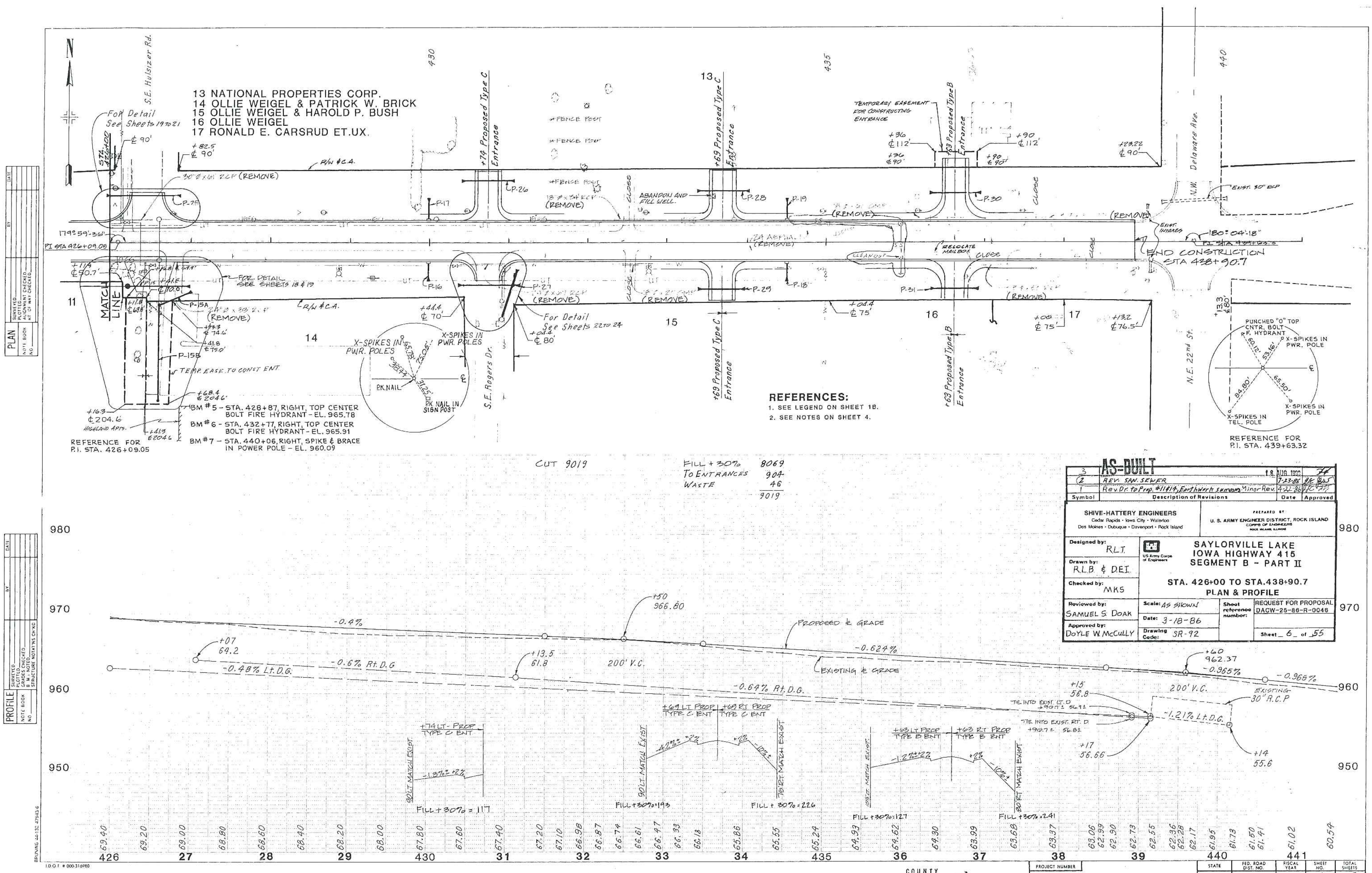
13 NATIONAL PROPERTIES CORP.
14 OLLIE WEIGEL & PATRICK W. BRICK
15 OLLIE WEIGEL & HAROLD P. BUSH
16 OLLIE WEIGEL
17 RONALD E. CARSRUD ET.UX.
S.E. Hulsizer Rd.
S.E. Rogers Dr.
N.W. Delaware Ave.
N.E. 22nd St.
MATCH LINE
For Detail See Sheets 19 TO 21
FOR DETAIL SEE SHEETS 18 & 19
For Detail See Sheets 22 TO 24
+74 Proposed Type C Entrance
+69 Proposed Type C Entrance
+63 Proposed Type B Entrance
TEMPORARY EASEMENT FOR CONSTRUCTING ENTRANCE
TEMP. EASE. TO CONST ENT.
ABANDON AND FILL WELL.
RELOCATE MAILBOX
CLOSE
(REMOVE)
PI STA 426+09.05
179°59'-36"
180°04'-18"
END CONSTRUCTION STA 438+90.7
BM #5 - STA. 428+87, RIGHT, TOP CENTER BOLT FIRE HYDRANT - EL. 965.78
BM #6 - STA. 432+77, RIGHT, TOP CENTER BOLT FIRE HYDRANT - EL. 965.91
BM #7 - STA. 440+06, RIGHT, SPIKE & BRACE IN POWER POLE - EL. 960.09
REFERENCE FOR P.I. STA. 426+09.05
REFERENCE FOR P.I. STA. 439+63.32
X-SPIKES IN PWR. POLES
P.K. NAIL
P.K. NAIL IN SIGN POST
PUNCHED "O" TOP CNTR. BOLT F. HYDRANT
X-SPIKES IN PWR. POLE
X-SPIKES IN TEL. POLE
REFERENCES:
1. SEE LEGEND ON SHEET 1B.
2. SEE NOTES ON SHEET 4.
CUT 9019
FILL + 30% 8069
TO ENTRANCES 904
WASTE 46
9019
PROPOSED ℄ GRADE
EXISTING ℄ GRADE
-0.4%
-0.624%
-0.965%
-0.48% Lt. D.G.
-0.6% Rt. D.G
-0.64% Rt. D.G.
-1.21% Lt. D.G.
200' V.C.
+50 966.80
+60 962.37
EXISTING 30" R.C.P
FILL + 30% = 117
FILL + 30% = 193
FILL + 30% = 226
FILL + 30% = 127
FILL + 30% = 241
AS-BUILT
3 — 18 AUG 1988
2 REV. SAN. SEWER 7-23-86
1 Rev. Dr. to Prop. #11 & 14, Earthwork summary, Minor Rev. 4-22-86
Symbol | Description of Revisions | Date | Approved
SHIVE-HATTERY ENGINEERS
Cedar Rapids · Iowa City · Waterloo
Des Moines · Dubuque · Davenport · Rock Island
PREPARED BY U. S. ARMY ENGINEER DISTRICT, ROCK ISLAND
US Army Corps of Engineers
Designed by: R.L.T.
Drawn by: R.L.B. & D.E.I.
Checked by: MKS
Reviewed by: SAMUEL S. DOAK
Approved by: DOYLE W. McCULLY
SAYLORVILLE LAKE
IOWA HIGHWAY 415
SEGMENT B - PART II
STA. 426+00 TO STA. 438+90.7
PLAN & PROFILE
Scale: AS SHOWN
Date: 3-18-86
Drawing Code: SR-92
REQUEST FOR PROPOSAL DACW-25-86-R-0046
Sheet 6 of 55
STATE IOWA | FED. ROAD DIST. NO. 5 | SHEET NO. 6 | TOTAL SHEETS 55