# DAVIS COUNTY, IOWA
# IOWA COMMUNICATIONS NETWORK
# DAVIS COUNTY LAW ENFORCEMENT CENTER
# 102 ANDERSON STREET, BLOOMFIELD, IOWA

| PROJECT COORDINATION CONTACTS | | | |
|---|---|---|---|
| NAME | AGENCY | PHONE | EMAIL |
| TIM FLICKINGER | ICN | 515-725-4699 | TIMOTHY.FLICKINGER@IOWA.GOV |
| TED HENDERSON | CITY OF BLOOMFIELD PUBLIC WORKS | 641-664-2260 | |
| BRENDA SANDERS | IOWA DOT DISTRICT 5 | 641-683-3331 | |

N

NTS

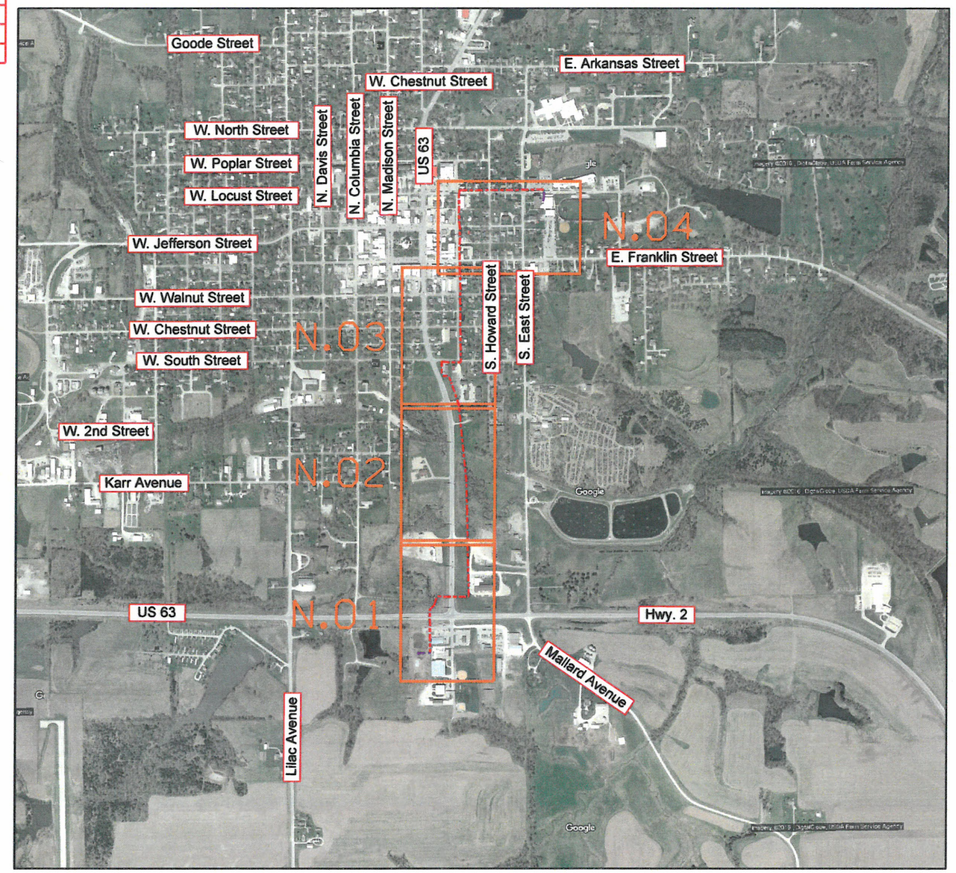


| SHT. NO. | SHEET INDEX |
|---|---|
| A SHEETS | TITLE SHEETS |
| A.01 | TITLE PAGE |
| A.02 | LEGEND AND SYMBOL INFORMATION SHEET |
| C SHEETS | QUANTITIES AND GENERAL INFORMATION |
| C.01 | ESTIMATE OF QUANTITIES, PROJECT DESCRIPTION, AND LISTING OF FIBER WORK |
| C.02 | GENERAL NOTES |
| C.03 | UTILITY CONTACTS |
| N SHEETS | FIBER PLANS |
| N.01 - N.04 | FIBER DESIGN |
| ATTACHMENTS | DAVIS COUNTY HIGH SCHOOL CONDUIT PLANS<br>DAVIS COUNTY LAW ENFORCEMENT CENTER UTILITY PLANS<br>ICN TYPICAL DETAILS FOR:<br>- HANDHOLES<br>- TRI-VIEW LOCATE PEDESTAL<br>- HIDEOUT LOCATE PEDESTAL |

| PERMITS REQUIRED | |
|---|---|
| SHT. NO. | PERMIT |
| N.01-N.03 | IOWA DOT ROW |

IOWA ONE CALL
1-800-292-8989
www.iowaonecall.com
811 Know what's below. Call before you dig.

PRIOR TO CONSTRUCTION:

CALL 811 FOR LOCATION OF UNDERGROUND TELEPHONE, ELECTRIC, GAS MAINS, CABLE TELEVISION AND OTHER UTILITIES.

EXISTING UNDERGROUND AND OVERHEAD UTILITIES AND DRAINAGE STRUCTURES HAVE BEEN PLOTTED FROM AVAILABLE INFORMATION AND THEREFORE, THEIR LOCATIONS MUST BE CONSIDERED APPROXIMATE ONLY. IT IS THE RESPONSIBILITY OF THE INDIVIDUAL CONTRACTORS TO EXACTLY LOCATE AND PROTECT EACH EXISTING UTILITY BEFORE AND DURING ACTUAL CONSTRUCTION.

LICENSED PROFESSIONAL ENGINEER
GREGORY T. SEIB
23179
IOWA

I hereby certify that this engineering document was prepared by me or under my direct personal supervision and that I am a duly licensed Professional Engineer under the laws of the State of Iowa.

Gregory T. Seib — 9-6-2016
Signature — Date

Gregory T. Seib
Printed or Typed Name

23179
License Number

My license renewal date is December 31, 2016

Pages or sheets covered by this seal: A.01-A.02, C.01-C.03, N.01-N.04

| ENGLISH | ICN | DESIGN TEAM Olsson Associates | DAVIS COUNTY | OSP LOG NUMBER 26160105 DAVIS COUNTY LAW ENFORCEMENT CENTER | SHEET NUMBER A.01 |
|---|---|---|---|---|---|

# LEGEND AND SYMBOLS

| | |
|---|---|
| SPLICE–W/LOC. STATION | SPLICE MSXXX-A (EOC, EOH, #F; LP) |
| SPLICE–NO LOC. STATION | SPLICE MS702B-A (EOC 00000, EOH 00000, #F) |
| FIBER CHANGE (BID & CONST. ISSUE) | |
| CASING PIPE (PVC OR STEEL) | |
| (GALV. IRON PIPE) G.I.P. | |
| RIGHT–OF–WAY LINE(phantom linetype) | R/W |
| CENTER LINE(center linetype) | ℄ |
| FENCE LINE | |
| PROPERTY LINE | P/L |
| EDGE OF GRAVEL | EOG |
| EDGE OF PAVEMENT | EOP |
| EDGE OF CONCRETE | EOC |
| CITY, COUNTY OR STATE BOUNDARY | |
| SECTION LINE | |
| TEMP. EASEMENT | |
| BACK OF CURB | B.O.C. |
| CONCRETE SIDEWALK | C.S.W. |
| GAS LINE | G |
| STORM SEWER | STM |
| SANITARY SEWER | SS |
| TELEPHONE LINE | TELE , BT |
| WATER LINE | W |
| UNDERGROUND ELECTRIC | ELEC , UGE |
| SUBSURFACE DRAIN TILE | S , TL |
| OVERHEAD ELEC. | OHE |

| | |
|---|---|
| ROUTE MARKERS | 12+34 ICN MKR |
| POLE | |
| POLE W/ANCHOR | |
| TILE INTAKE | |
| MILE POST MARKER | |
| CULVERT | |
| BRIDGE | |
| TREE & VEGETATION | |
| STREET SIGN | |
| FIRE HYDRANT | |
| STREET LIGHT | |
| MANHOLES | STM, SS, TELF |
| REMOVE & REPLACE | R/R |
| FLOW LINE | F/L |
| CUT & REPLACE | C/R |
| DITCH LINE | D/L |
| UTILITY PEDESTAL | |
| WATER METER | |
| GAS METER | |
| GAS MARKER | |
| TELEPHONE MARKER | |
| R/W MARKER | |
| DRAIN | |
| RAILROAD SIGNAL/SIGN | |
| GROUND | |
| GROUND ROD | |
| MAILBOX | |
| ICN CABLE SEQUENCE NUMBER | (SEQ.#12345) |
| SECTION MARKER | 3 4 / 2 1 |

## UNIQUE SYMBOLS FOR THIS PROJECT

| EXISTING | PROPOSED | DESCRIPTIONS |
|---|---|---|
| | | ICN Bored Conduit |
| | | Existing Conduit |
| | | ICN Plowed Conduit |
| | | ICN Handhole |
| | LP | Locate Point |

## ABBREVIATIONS

| | |
|---|---|
| ICN | Iowa Communications Network |
| NEC | National Electric Code |
| TCP | Traffic Control Plan |
| ROW | Right of Way |
| HH | Handhole |
| DOT | Department of Transportation |
| NTS | Not to Scale |

IOWA ONE CALL
1-800-292-8989
www.iowaonecall.com

NOTE: THE PLAN LOCATIONS OF UNDERGROUND AND AERIAL UTILITIES, WHEN SHOWN, ARE APPROXIMATE ONLY. IN ADDITION, A PORTION OF UTILITY INFORMATION MAY NOT HAVE BEEN PROVIDED. ALL UTILITIES SHALL BE LOCATED AND MARKED PRIOR TO CONSTRUCTION. THE CONTRACTOR SHALL BE RESPONSIBLE FOR CONTRACTING UTILITIES AND LOCATOR SERVICES AND SCHEDULING THE LOCATION OF UNDERGROUND UTILITIES. THE CONTRACTOR SHALL ALSO CONTACT ANY AND ALL UTILITIES AND LOCAL GOVERNMENT AGENCIES NOT PARTICIPATING IN LOCATION SERVICES.

**LEGEND AND SYMBOL INFORMATION SHEET**

## ESTIMATE OF QUANTITIES

| Item No. | Item | Unit | Planned Total | As-Built Total |
|---|---|---|---|---|
| 1 | TRAFFIC CONTROL | LS | 1 | |
| 2 | MOBILIZATION | LS | 1 | |
| 3 | INSTALL HANDHOLE, 24" x 36" x 30" | EACH | 6 | |
| 4 | 1 1/2" HDPE CONDUIT, BORED* | LINEAR FT | 6,173 | |
| 5 | 1 1/2" HDPE CONDUIT, PLOWED* | LINEAR FT | 577 | |
| 6 | 12 SM DIELECTRIC FIBER | LINEAR FT | 7,051 | |
| 7 | 12 SM DIELECTRIC FIBER (COIL) | LINEAR FT | 1,000 | |
| 8 | WARNING TAPE | LINEAR FT | 577 | |
| 9 | ICN TRI-VIEW LOCATE PEDESTAL | EACH | 1 | |
| 10 | ICN HIDEOUT LOCATE PEDESTAL | EACH | 1 | |
| 11 | ICN ROUTE MARKER - WARNING | EACH | 8 | |
| 12 | #12 TRACER WIRE | LINEAR FT | 7,051 | |
| 13 | GROUND ROD | EACH | 2 | |

*CONDUIT BORE AND PLOW DISTANCES SHOWN ON PLANS ARE ESTIMATED FOR CONSTRUCTION. THE CONTRACTOR MAY PLOW IN LIEU OF BORING WHERE EXISTING CONDITIONS ALLOW.

## PROJECT DESCRIPTION

PROJECT SUMMARY

ICN FIBER OPTIC INSTALLATION PROJECT IN DAVIS COUNTY.

ICN PROVIDING NEW FIBER OPTIC TO DAVIS COUNTY LAW ENFORCEMENT CENTER; NEW BUILDING BEING CONSTRUCTED.

THIS PROJECT INVOLVES INSTALLING A 12 STRAND FIBER CONNECTION FROM THE NEW DAVIS COUNTY LAW ENFORCEMENT CENTER AT 102 ANDERSON STREET, BLOOMFIELD, IA TO DAVIS COUNTY HIGH SCHOOL AT 503 E. LOCUST STREET, BLOOMFIELD, IA. APPROXIMATELY 7,000 FEET OF UNDERGROUND CONDUIT WILL BE INSTALLED, WHICH WILL CONSIST OF A COMBINATION OF DIRECTIONAL BORING AND PLOWING (1) 1 1/2" HDPE CONDUIT. FIBER SPLICING AND DATA TRAFFIC CUTOVERS WILL BE COMPLETED UNDER A SEPARATE CONTRACT.

## SUMMARY OF QUANTITY REVISIONS

| Item No. | Item | Unit | Quantity Change from Original Plan Set |
|---|---|---|---|
| 1 | 1 1/2" HDPE CONDUIT, BORED | LINEAR FT | +678 |
| 2 | 1 1/2" HDPE CONDUIT, PLOWED | LINEAR FT | -678 |
| 3 | WARNING TAPE | LINEAR FT | -678 |

## LISTING OF HANDHOLE WORK

| Handhole Label | Handhole Type | Route | ICN Station | Tri-View Locate Pedestal | Hideout Locate Pedestal | 12 SM Dielectric Fiber Coil |
|---|---|---|---|---|---|---|
| HH 1-1 | 24" x 36" x 30" | Hwy. 63 | 1+71 | 1 | | 150 |
| HH 1-2 | 24" x 36" x 30" | Hwy. 63 | 7+14 | | | 150 |
| HH 1-3 | 24" x 36" x 30" | Hwy. 63 | 11+63 | | | 150 |
| HH 3-1 | 24" x 36" x 30" | E. South Street | 38+74 | | | 150 |
| HH 4-1 | 24" x 36" x 30" | S. Dodge Street | 56+24 | | | 150 |
| HH 4-2 | 24" x 36" x 30" | E. Locust Street | 59+92 | | 1 | 150 |
| HH 4-3E | EXISTING | E. Locust Street | 69+21 | | | 50 |
| | | | **Total** | **1** | **1** | **950** |

## LISTING OF CONDUIT & FIBER WORK

| Conduit Run | Location | | Length | 1 1/2" HDPE Conduit, Bored | 1 1/2" HDPE Conduit, Plowed | 12 SM Dielectric Fiber |
|---|---|---|---|---|---|---|
| | From | To | | | | |
| 1A | BUILDING ENTRANCE (Sta. 0+00) | HH 1-1 (Sta. 1+71) | 171 | - | - | 171 |
| 1B | HH 1-1 (Sta. 1+71) | HH 1-2 (Sta. 7+14) | 543 | 543 | - | 543 |
| 1C | HH 1-2 (Sta. 7+14) | HH 1-3 (Sta. 11+63) | 449 | 449 | - | 449 |
| 1D | HH 1-3 (Sta. 11+63) | END OF BORE (Sta. 18+41) | 678 | 678 | - | 678 |
| 2A | END OF BORE (Sta. 18+41) | BEGINNING OF BORE (Sta. 21+08) | 267 | - | 267 | 267 |
| 2B | BEGINNING OF BORE (Sta. 21+08) | END OF BORE (Sta. 35+64) | 1456 | 1456 | - | 1456 |
| 3A | END OF BORE (Sta. 35+64) | HH 3-1 (Sta. 38+74) | 310 | - | 310 | 310 |
| 3B | HH 3-1 (Sta. 38+74) | HH 4-1 (Sta. 56+24) | 1750 | 1750 | - | 1750 |
| 4A | HH 4-1 (Sta. 56+24) | HH 4-2 (Sta. 59+92) | 368 | 368 | - | 368 |
| 4B | HH 4-2 (Sta. 59+92) | HH 4-3E (Sta. 69+21) | 929 | 929 | - | 929 |
| 4C | HH 4-3E (Sta. 69+21) | BUILDING ENTRANCE (Sta. 70+51) | 130 | - | - | 130 |
| | | | **Totals** | **6173** | **577** | **7051** |

# ESTIMATE OF QUANTITIES, PROJECT DESCRIPTION, AND LISTING OF WORK

## GENERAL NOTES

MISC.

1. AERIAL PHOTOGRAPHY SHOWN ON PLANS IS FOR REFERENCE ONLY AND MAY NOT MATCH EXISTING CONDITIONS.

2. ALL EXISTING IOWA COMMUNICATIONS NETWORK FIBER SHALL BE KEPT IN OPERATION. CONTRACTOR SHALL MAINTAIN AND PROTECT ALL EXISTING COMMUNICATION CABLES DURING CONSTRUCTION UNLESS OTHERWISE DIRECTED BY THE ENGINEER.

3. THE RIGHT-OF-WAY, WHERE SHOWN ON PLANS, IS APPROXIMATE ONLY. RIGHT-OF-WAY SHALL BE VERIFIED BY THE CONTRACTOR PRIOR TO CONSTRUCTION.

UTILITIES

4. THE PLAN LOCATIONS OF UNDERGROUND AND AERIAL UTILITIES, WHEN SHOWN, ARE APPROXIMATE ONLY. IN ADDITION, A PORTION OF UTILITY INFORMATION MAY NOT HAVE BEEN PROVIDED. ALL UTILITIES SHALL BE LOCATED AND MARKED PRIOR TO CONSTRUCTION. THE CONTRACTOR SHALL BE RESPONSIBLE FOR CONTACTING UTILITIES AND LOCATOR SERVICES AND SCHEDULING THE LOCATION OF UNDERGROUND UTILITIES. THE CONTRACTOR SHALL ALSO CONTACT ANY AND ALL UTILITIES AND LOCAL GOVERNMENT AGENCIES NOT PARTICIPATING IN LOCATION SERVICES.

5. THE CONTRACTOR SHALL NOT DISTURB ANY EXISTING UTILITIES EXCEPT AS SPECIFICALLY DEFINED WITHIN THE SCOPE OF WORK FOR THIS CONTRACT. WHERE WORK AFFECTS OR IS AFFECTED BY THE EXISTING UTILITIES, THE WORK SHALL BE COORDINATED WITH THE UTILITY COMPANY AND/OR OWNER. THE CONTRACTOR IS RESPONSIBLE FOR COORDINATING WITH IOWA COMMUNICATIONS NETWORK.

6. UTILITY COMPANIES WHOSE FACILITIES ARE SHOWN ON THE PLANS OR KNOWN TO BE WITHIN THE CONSTRUCTION LIMITS SHALL BE NOTIFIED BY THE CONTRACTOR OF THE STARTING CONSTRUCTION DATE.

CONDUIT

7. THE CONTRACTOR SHALL BORE ALL CROSSINGS BENEATH ROADWAYS, STREETS, OTHER PAVED SURFACES, RAILROAD, OR OTHER STRUCTURE. DEPTH OF ALL BORES SHALL BE A MINIMUM OF 48 INCHES UNLESS OTHERWISE SPECIFIED IN PLANS.

8. ALL CONDUIT SHALL BE HDPE CONDUIT.

9. THE MINIMUM BENDING RADIUS OF HDPE CONDUIT SHALL BE THE CONDUIT MANUFACTURER'S RECOMMENDATIONS FOR MINIMUM BENDING RADIUS.

CONSTRUCTION

10. ANY AND ALL IMPROVEMENTS SUCH AS ASPHALT OR CONCRETE PAVEMENTS, CURBS, GUTTERS, WALKS, DRAINAGE DITCHES, CULVERTS, DRAIN TILES, EMBANKMENTS, SHRUBS, TREES, GRASS, SOD, ETC., IF DAMAGED, SHALL BE RESTORED TO PRE-CONSTRUCTION CONDITIONS (OR BETTER) AS DIRECTED BY THE ENGINEER AT NO ADDITIONAL COST TO THE IOWA COMMUNICATIONS NETWORK.

11. IT SHALL BE THE CONTRACTOR'S RESPONSIBILITY TO REPAIR ANY EXISTING CONDUIT, CONDUCTORS, OR OTHER FACILITIES DAMAGED DURING CONSTRUCTION. ALL EXISTING INFRASTRUCTURE REMOVED OR DAMAGED BY THE CONTRACTOR SHALL BE REPLACED IN KIND BY THE CONTRACTOR, WITH NO ADDITIONAL COMPENSATION.

12. MATERIALS AND CONSTRUCTION SHALL CONFORM TO THE REQUIREMENTS OF ALL APPLICABLE SECTIONS INCLUDING BUT NOT LIMITED TO ARTICLES 2523 AND 2525, OF THE "IOWA DEPARTMENT OF TRANSPORTATION ENGLISH STANDARD SPECIFICATIONS FOR HIGHWAY AND BRIDGE CONSTRUCTION, SERIES 2015" PLUS CURRENT SUPPLEMENT SPECIFICATIONS AND SPECIAL PROVISIONS.

## GENERAL NOTES

CONSTRUCTION (CONTINUED)

13. THE CONTRACTOR SHALL NOT DISTURB DESIRABLE GRASS AREAS AND DESIRABLE TREES OUTSIDE THE CONSTRUCTION LIMITS. THE CONTRACTOR WILL NOT BE PERMITTED TO PARK OR SERVICE VEHICLES AND EQUIPMENT OR USE THESE AREAS FOR STORAGE OF MATERIALS. STORAGE, PARKING AND SERVICE AREA(S) WILL BE SUBJECT TO THE APPROVAL OF THE RESIDENT CONSTRUCTION ENGINEER.

14. THE TOP SIX (6) INCHES OF THE DISTURBED AREAS SHALL BE FREE OF ROCK AND DEBRIS AND SHALL BE FOR THE ESTABLISHMENT OF VEGETATION, SUBJECT TO THE APPROVAL OF THE ENGINEER.

15. THE CONTRACTOR IS EXPECTED TO HAVE MATERIALS, EQUIPMENT, AND LABOR AVAILABLE ON A DAILY BASIS TO INSTALL AND MAINTAIN EROSION CONTROL FEATURES ON THE PROJECT. THIS MAY INVOLVE SEEDING, SILT FENCE, ROCK DITCH CHECKS, SILT BASINS, OR SILT DIKES.

16. NO OPEN HOLES OR MOUNDS OF DIRT SHALL BE LEFT UNPROTECTED DURING NON-WORKING HOURS.

FIBER

17. CONTRACTOR SHALL PLACE TAGS ON ALL FIBER OPTIC CABLE IDENTIFYING THE OWNER AND DIRECTION OF THE CABLE AT EACH TERMINATION POINT AND IN EVERY HANDHOLE AND SPLICE VAULT. TAGS SHALL CLEARLY IDENTIFY WHERE EACH INDIVIDUAL CABLE RUN ORIGINATED AND WHERE IT ENDS (HANDHOLE TO HANDHOLE, HANDHOLE TO CABINET, HANDHOLE TO BUILDING, ETC.) FOR FIBER INSTALLATIONS WITH JOINT DEPARTMENT OF TRANSPORTATION/OTHER AGENCY (OR ENTITY) USE WHERE THE FIBER WILL BE OWNED BY THE OTHER AGENCY (OR ENTITY), INSTALL TYPICAL IDENTIFIERS AND/OR MARKINGS FOR THAT FIBER.

18. IN THE EVENT IT IS SUSPECTED THAT CABLE DAMAGE HAS OCCURRED PRIOR TO FINAL ACCEPTANCE, CONTRACTOR SHALL PERFORM OTDR TESTING OF ALL FIBER STRANDS WITHIN SEVENTY TWO (72) HOURS AFTER NOTIFICATION AND SUBMIT A COPY OF THE OTDR TEST TO THE ENGINEER UPON COMPLETION.

19. CONTRACTOR SHALL REPLACE OR REPAIR, AS DIRECTED BY THE ENGINEER, ANY DAMAGE OCCURRING BEFORE FINAL ACCEPTANCE AT NO ADDITIONAL COST TO THE IOWA COMMUNICATIONS NETWORK. THE CONTRACTOR WILL NOT BE GRANTED AN EXTENSION OF TIME FOR DELAYS CAUSED BY REPLACING OR REPAIRING THE INSTALLED CABLE.

20. CONTRACTOR SHALL REPAIR OR REPLACE ANY DEFECT IN THE INSTALLED CABLE AT NO ADDITIONAL COST TO THE IOWA COMMUNICATIONS NETWORK. CONSIDER A DEFECT TO BE ANY CONDITION RESULTING IN A NEGATIVE OR ADVERSE EFFECT ON CURRENT OR FUTURE OPERATIONS OF THE COMPLETED FIBER OPTIC COMMUNICATION SYSTEM AS DETERMINED BY THE ENGINEER.

21. ANY EXISTING WIRING THAT IS DAMAGED DURING FIBER OPTIC CABLE INSTALLTION SHALL BE REPLACED OR REPAIRED, AS DIRECTED BY THE ENGINEER, AT NO ADDITIONAL COST TO THE IOWA COMMUNICATIONS NETWORK.

22. CONTRACTOR SHALL INSTALL WARNING TAPE OVER ALL PLOWED CONDUIT AND DIRECT BURIED FIBER CABLES.

23. WARNING MARKERS FOR FIBER OPTIC CABLE SHOULD TYPICALLY BE PLACED:
- AT EVERY CHANGE OF DIRECTION OF FIBER CABLE ROUTE.
- AT INTERSECTIONS OR ROAD CROSSINGS (EACH SIDE).
- AT BEGINNING AND END OF BORES WHEN TRANSITIONING FROM DIRECT BURIED
- APPROXIMATELY EVERY 1 / 4 MILE ALONG FIBER ROUTE OR MORE IF REQUIRED BY LOCAL ROW ENTITY (PLACED AT EDGE OF ROW).
- AT HANDHOLES

ICN STANDARDS:

CONTRACTOR SHALL ADHERE TO ICN STANDARD INSTALLATION DRAWING TYPICALS, PROJECT DETAILS, AND STANDARDS WITHIN THE SCOPE OF WORK BID DOCUMENT.

**GENERAL NOTES**

## UTILITY CONTACTS

| Company | Name | Street | City, State, Zip | Phone |
|---|---|---|---|---|
| CITY OF BLOOMFIELD ELECTRIC PLANT | MIKE HUMPHREY | 111 W. FRANKLIN STREET | BLOOMFIELD, IA 52537 | 641-664-2260, EXT. 18 |
| CITY OF BLOOMFIELD GAS | KEITH SULLIVAN | 111 W. FRANKLIN STREET | BLOOMFIELD, IA 52537 | 641-664-2260, EXT. 24 |
| CITY OF BLOOMFIELD PUBLIC WORKS | TED HENDERSON | 111 W. FRANKLIN STREET | BLOOMFIELD, IA 52537 | 641-664-2260 |
| CITY OF BLOOMFIELD STREETS | GARRY FELDMANN | 111 W. FRANKLIN STREET | BLOOMFIELD, IA 52537 | 641-664-2092 |
| CITY OF BLOOMFIELD WASTE WATER | JEREMY WALKER | 111 W. FRANKLIN STREET | BLOOMFIELD, IA 52537 | 641-664-3071 |
| CITY OF BLOOMFIELD WATER DISTRIBUTION | MARK MCFARLAND | 111 W. FRANKLIN STREET | BLOOMFIELD, IA 52537 | 641-664-2260, EXT. 19 |
| DAVIS COUNTY COMMUNITY HIGH SCHOOL | MEGHAN SHIVELY | | | 641-664-2200, EXT. 1202 |
| DAVIS COUNTY LAW ENFORCEMENT CENTER | SHERRI THORDARSON | | | 641-664-2385 |
| DAVIS COUNTY LAW ENFORCEMENT CENTER BUILDING CONSTRUCTION | JOHN HANSON | | | 319-759-2330 |
| IOWA COMMUNICATIONS NETWORK (LOCAL FIBER OPTICS) | TIM FLICKINGER | 400 E 14TH STREET, GRIMES STATE OFFICE BLDG | DES MOINES, IA, 50319 | 515-725-4699 |
| IOWA DEPARTMENT OF TRANSPORTATION (UTILITY RELOCATION COORDINATOR) | JEFFRY N. MCCOLLOUGH | | | 515-239-1373 |
| IOWA DOT DISTRICT 5 | BRENDA SANDERS | 2930 N. COURT ROAD | OTTUMWA, IA 52501 | 641-683-3331 |

NOTE 1: THIS LIST IS NOT ALL-INCLUSIVE. CONTRACTOR IS RESPONSIBLE TO REQUEST LOCATES OF ALL UTILITIES, AND COORDINATE IF NEEDED, PRIOR TO COMMENCING WORK. 72 HOUR ADVANCE NOTICE IS REQUIRED TO NOTIFY ALL UTILITY COMPANIES.

NOTE 2: EXISTING UTILITY CONFLICTS: ANY CHANGES TO THE PLANNED RUNNING LINE REQUIRE PRE-APPROVAL BY THE ICN AND ROW AUTHORITY HAVING JURISDICTION. THE PLAN FOR PARALLEL UTILITIES WOULD BE TO ADJUST THE RUNNING LINE BY AN APPROPRIATE OFFSET (APPROXIMATELY 2') OR CHANGE DEPTH OF THE INSTALLATION DEPENDING ON ROW AVAILABILITY.

NOTE 3: CONTRACTOR WILL SCHEDULE A SITE WALKTHROUGH UPON COMPLETION OF LOCATES TO DETERMINE ANY CHANGES IN THE RUNNING LINE DUE TO EXISTING UTILITIES. ANY CHANGES REQUIRE IOWA DOT APPROVAL PRIOR TO CONSTRUCTION ON SEGMENTS INVOLVED.

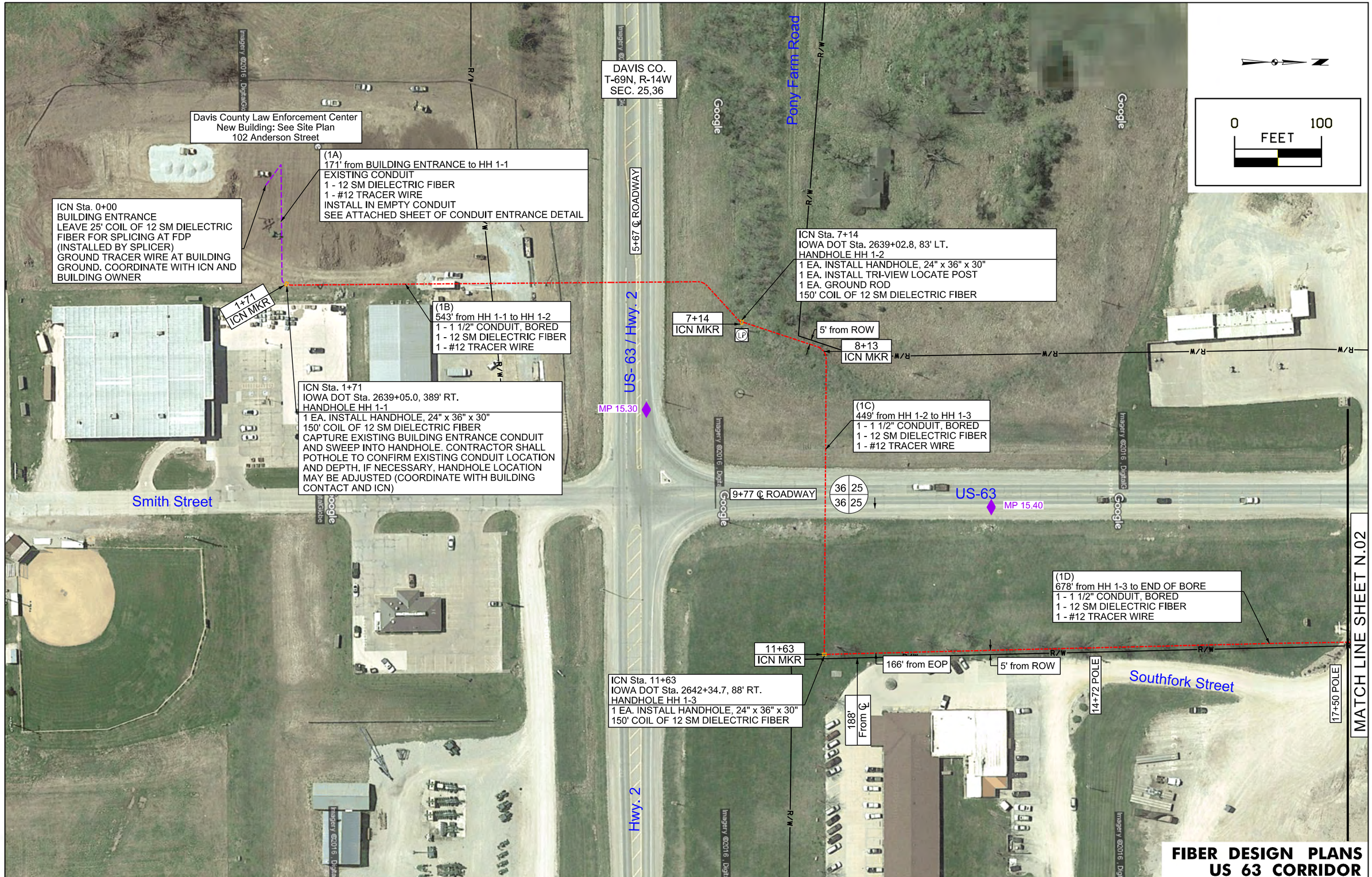


# FIBER DESIGN PLANS
# US 63 CORRIDOR

| ENGLISH | ICN | DESIGN TEAM Olsson Associates | DAVIS COUNTY | OSP LOG NUMBER 26160105 DAVIS COUNTY LAW ENFORCEMENT CENTER | SHEET NUMBER N.01 |
|---|---|---|---|---|---|

2:32:14 PM 9/6/2016 ckrull F:\2016\0501-1000\016-0760\40-Design\Microstation\016-0760_Davis County Law Enforcement Center\Sheets\Davis County Law Enforcement Center_01.dgn

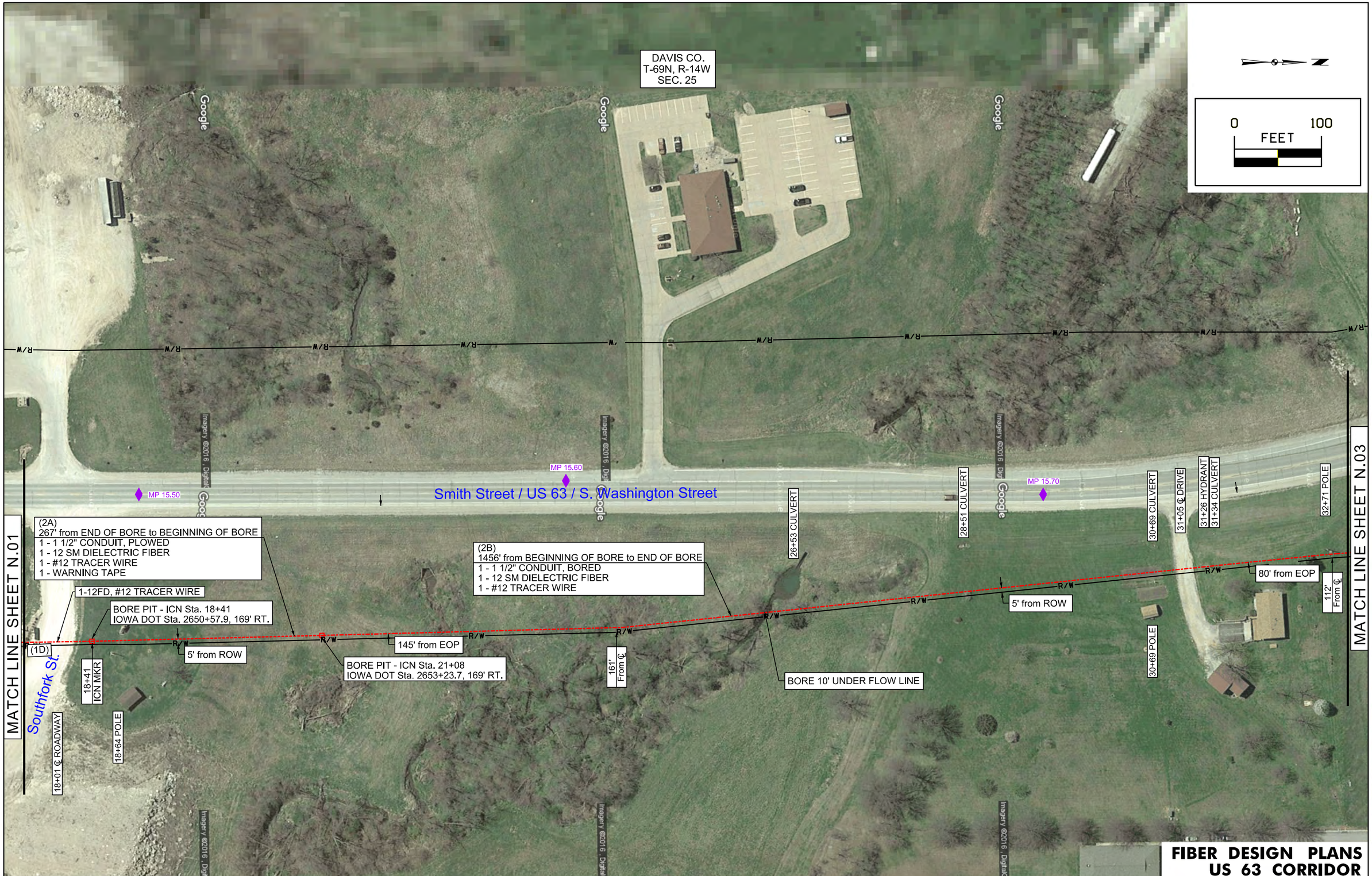


**FIBER DESIGN PLANS**
**US 63 CORRIDOR**

| ENGLISH | ICN | DESIGN TEAM Olsson Associates | DAVIS | COUNTY | OSP LOG NUMBER 26160105 DAVIS COUNTY LAW ENFORCEMENT CENTER | SHEET NUMBER N.02 |
|---|---|---|---|---|---|---|

11:21:47 AM9/6/2016 ckrull F:\2016\0501-1000\016-0760\40-Design\Microstation\016-0760_Davis County Law Enforcement Center\Sheets\Davis County Law Enforcement Center_02.dgn

# FIBER DESIGN PLANS
# US 63 CORRIDOR

| ENGLISH | ICN | DESIGN TEAM Olsson Associates | DAVIS COUNTY | OSP LOG NUMBER 26160105 DAVIS COUNTY LAW ENFORCEMENT CENTER | SHEET NUMBER N.03 |
|---|---|---|---|---|---|

11:21:53 AM9/6/2016 ckrull F:\2016\0501-1000\016-0760\40-Design\Microstation\016-0760_Davis County Law Enforcement Center\Sheets\Davis County Law Enforcement Center_03.dgn

59+55 ℄ ROADWAY

Sta. 59+92
HANDHOLE HH 4-2
1 EA. INSTALL HANDHOLE, 24" x 36" x 30"
150' COIL OF 12 SM DIELECTRIC FIBER

(4B)
929' from HH 4-2 to HH 4-3E
1 - 1 1/2" CONDUIT, BORED
1 - 12 SM DIELECTRIC FIBER
1 - #12 TRACER WIRE

6' from ROW

Install Under Sidewalk

E. Locust Street

67+21 POLE

ICN LINK 1504

ICN LINK 1504C

Sta. 69+21
HANDHOLE HH 4-3E
ENTER NEW CONDUIT INTO EXISTING HANDHOLE
EXISTING HANDHOLE (36" ROUND)
1 EA. HIDEOUT LOCATE POST
1 EA. GROUND ROD
50' COIL OF 12 SM DIELECTRIC FIBER

(4C)
130' from HH 4-3E to BUILDING ENTRANCE
EXISTING CONDUIT
1 - 12 SM DIELECTRIC FIBER
1 - #12 TRACER WIRE
SEE ATTACHED SHEET OF CONDUIT ENTRANCE DETAIL

0 100
FEET

63+12 ℄ ROADWAY

66+77 ℄ ROADWAY

Davis County High School
503 E. Locust Street

Sta. 70+51
BUILDING ENTRANCE
LEAVE 25' COIL OF 12 SM DIELECTRIC
FIBER FOR SPLICING AT FDP
(INSTALLED BY SPLICER)
GROUND TRACER WIRE IN BUILDING.
COORDINATE WITH ICN AND
BUILDING OWNER ON GROUND BAR LOCATION

(4A)
368' from HH 4-1 to HH 4-2
1 - 1 1/2" CONDUIT, BORED
1 - 12 SM DIELECTRIC FIBER
1 - #12 TRACER WIRE

57+75 ℄ DRIVE

5' from ROW

5' from EOP (typ.)

Sta. 56+24
HANDHOLE HH 4-1
1 EA. INSTALL HANDHOLE, 24" x 36" x 30"
150' COIL OF 12 SM DIELECTRIC FIBER

55+87 ℄ ROADWAY

E. Jefferson Street

S. Dodge Street

S. Howard Street

S. East Street

54+02 ℄ DRIVE

53+89 POLE

Install Under Sidewalk

6' from ROW

1-12FD, #12 TRACER WIRE

52+06 ℄ ROADWAY

E. Franklin Street

4' from EOP (typ.)

(3B)

HH 4-3E

MATCH LINE SHEET N.03

**FIBER DESIGN PLANS**
**S. DODGE STREET CORRIDOR**

| ENGLISH | ICN | DESIGN TEAM Olsson Associates | DAVIS COUNTY | OSP LOG NUMBER 26160105 DAVIS COUNTY LAW ENFORCEMENT CENTER | SHEET NUMBER N.04 |
|---|---|---|---|---|---|

11:21:58 AM9/6/2016 ckrull F:\2016\0501-1000\016-0760\40-Design\Microstation\016-0760_Davis County Law Enforcement Center\Sheets\Davis County Law Enforcement Center_04.dgn

SEE PRINT # 1504-37C
MATCH LINE STA. 957+20

DAVIS CO.

957+40 P.I. RT.
957+57 ℄ DRIVE
957+75 P.I. RT.
958+11 P.I. LT.
958+33 DRAIN
959+00 BEG. TREES
960+75 END TREES
961+03 ℄ GRAVEL DRIVE
961+58 BUILDING COR.
961+70 TELE CROSSING
961+83 TELE CROSSING
961+92 BUILDING COR.
962+20 POLE
962+53 P.I. LT.
962+57 TELE CROSSING
962+90 BEGIN GRAVEL
963+40 WATER LINE
963+70 C GRAVEL DR.
964+13 TREE
964+30 COR. POST
964+59 P.I. RT.
965+06 WATER LINE
965+11 ℄ 4' SIDEWALK
965+15 TELE CROSSING
965+21 GAS LINE
965+24 E.O.P.
965+55 E.O.P.
965+73 BUILDING COR.
965+92 P.I. RT.
965+99 P.I. UP
966+11 PULL BOX

BLOOMFIELD TWP.
T-69N R-14W
SEC. 25

PERRY TWP.
T-69N R-13W
SEC. 30

GRAVEL
ICN LINK 1504 4 FIBER .4/.3db
APPROX. SEC. LINE
960+34 ICN MKR
964+13 ICN MKR
WHITE HOUSE
INDIAN HILLS COMM. COL.
GRASS AREA
N. EAST ST.
E. LOCUST ST.
1 - 1 1/2" HDPE / 1 - 12FD / #12 TRACER WIRE
NEW BUILD TO EX. HH
E.O.C.-SEQ.#28880
PROP. LINE
500 GAL. PROPANE TANK
RED SHED
GRAVEL PARKING LOT
195' OF 1-1/4" CONDUIT W/ 1/2" COPPER FUEL LINE
SEQ.#'S
26562
26542
ICN
OPEN CUT
LINK 1504C 2" DUCT
CEMENT PARKING & DRIVE
7.5. K.W. GEN.
SHOP AREA
F.O.T.S. ROOM 131
DAVIS COUNTY COMM. H.S.
MULTI-DUCT SEE DETAIL "A"

NOTE: OPEN CUT @ E. LOCUST ST.
PER ALLEN JOHNSON (PUBLIC WORKS DIRECTOR)

## DETAIL "A"

| ICN MULTI-DUCT | # OF FIBERS OWNED |
|---|---|
| (1) | |
| (2) | |
| (3) | |

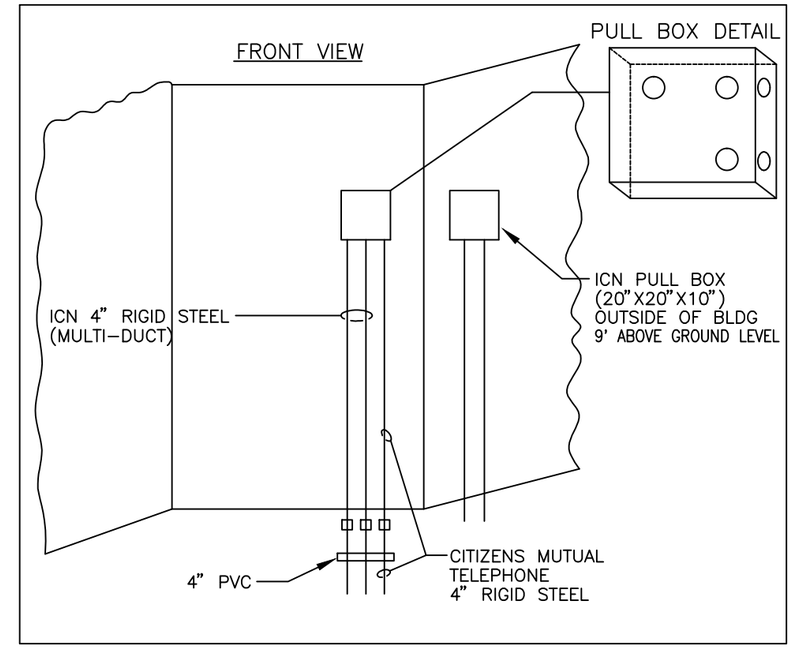


# BLOOMFIELD
## DAVIS COUNTY COMM. H.S.
106 N EAST ST
BLOOMFIELD, IA 52537
+
## INDIAN HILLS COMM. COLLEGE
204 N EAST ST
BLOOMFIELD, IA 52537

**IOWA COMMUNICATIONS NETWORK**
400 EAST 14TH STREET, GRIMES STATE OFFICE BUILDING, DES MOINES, IOWA 50319
ICN © 2007 , COPY WITH PERMISSION

THIS DRAWING IS PROVIDED FOR GENERAL INFORMATION ONLY AND IS NOT TO BE USED TO DETERMINE PRECISE ICN PLACEMENT.
CALL ONE CALL BEFORE EXCAVATION (1-800-292-8989)

| | | |
|---|---|---|
| 1 | AS-BUILT REVISION | 8-20-98 |

SCALE: 1" = 100' | SIZE: B

LINKS 1504 & 1504C

BLFD (BLOOMFIELD.DWG)

\\icn.state.ia.us\data\CADdata\AutoCAD Drawings\AS-BUILT DRAWINGS\CITIES WITH ALL LINKS\BLOOMFIELD.dwg

## SYMBOLS LIST:

ABBREVIATIONS:

| | |
|---|---|
| AC | ABOVE COUNTER |
| AFF | ABOVE FINISHED FLOOR |
| BS | BOILER SHUT-OFF |
| CB | CALL BACK |
| CD | CONTROL DAMPER |
| CR | CARD READER |
| CUH-# | CABINET UNIT HEATER |
| D | DIMMER |
| DA | DOOR ALARM |
| DC | DOOR CLOSER |
| DDC | DIRECT DIGITAL CONTROL |
| DP | DOOR POSITION SWITCH |
| DH | DOOR HOLD OPEN |
| DHWCP-# | DOMESTIC HOT WATER CIRCULATION PUMP |
| DO | DOOR OPERATOR |
| DW | DISHWASHER |
| E | EXISTING DEVICE TO REMAIN |
| EC-# | ELECTRIC COIL |
| ED | ELECTRIC DRYER |
| EF-# | EXHAUST FAN |
| EM | EMERGENCY BALLAST |
| EPO | EMERGENCY POWER OFF |
| ER | EXISTING DEVICE RELOCATED |
| ES | ELECTRIC STRIKE |
| EWC | ELECTRIC WATER COOLER, DEVICE BEHIND HOUSING |
| F | FUTURE |
| FAAP | FIRE ALARM ANNUNCIATOR PANEL |
| FACP | FIRE ALARM CONTROL PANEL |
| GD | GARBAGE DISPOSAL |
| GFI | GROUND FAULT INTERRUPTABLE DEVICE |
| GFUH-# | GAS-FIRED UNIT HEATER |
| GP | GROUND FAULT PROTECTED DEVICE |
| GWH-# | GAS-FIRED WATER HEATER |
| IG | ISOLATED GROUND DEVICE |
| IP | INMATE PHONE - MOUNT +52" A.F.F. |
| IRH-# | INFRARED RADIANT HEATER |
| K | KEYED |
| KP | KEYPAD |
| MUA-# | MAKE-UP AIR UNIT |
| MW | MICROWAVE |
| N | NEW DEVICE IN EXISTING LOCATION |
| NL | NIGHT LIGHT |
| PC | PHOTOCELL |
| PP | POWER POLE |
| PR | PROJECTOR |
| PS | POWER SUPPLY |
| R | EXISTING DEVICE TO BE REMOVED |
| REF | REFRIGERATOR |
| RG | RANGE |
| RR | EXISTING DEVICE TO BE REMOVED AND RELOCATED |
| RTU-# | ROOFTOP UNIT |
| SD | SMOKE DAMPER |
| SEC | SECURITY ENCLOSURE |
| S/F | FUSE STAT SWITCH WITH FUSE, MOUNT ADJACENT TO EQUIPMENT |
| SS | SURGE SUPPRESSION DEVICE |
| TR | TAMPER RESISTANT DEVICE |
| UH-# | UNIT HEATER |
| VC | VOLUME CONTROL |
| VEF-# | VEHICLE EXHAUST FAN |
| VFD | VARIABLE FREQUENCY DRIVE |
| VG | VANDAL GUARD LEXAN COVER |
| WAP | WIRELESS ACCESS POINT |
| WG | WIREGUARD |
| WH-# | WATER HEATER |
| WP | WEATHERPROOF DEVICE |
| 3 | 3-WAY |
| 4 | 4-WAY |
| #D | DATA OUTLET (# INDICATES QUANTITY) |
| #V | VOICE OUTLET (# INDICATES QUANTITY) |

ABBREVIATIONS:

| | |
|---|---|
| | POINT OF CONNECTION |
| # | KEYED NOTE |
| # | KITCHEN EQUIPMENT INDENTIFICATION TAG |
| # / # | DETAIL REFERENCE (X = DETAIL NUMBER, Y = SHEET NUMBER) |

LIGHTING SYMBOLS:

| | |
|---|---|
| y | SINGLE POLE SWITCH, +48" A.F.F. UNLESS OTHERWISE NOTED (y = SWITCH LEG ID) |
| 3,y | THREE-WAY SWITCH, +48" A.F.F. UNLESS OTHERWISE NOTED (y = SWITCH LEG ID) |
| 4,y | FOUR-WAY SWITCH, +48" A.F.F. UNLESS OTHERWISE NOTED (y = SWITCH LEG ID) |
| D,y | DIMMER SWITCH, +48" A.F.F. UNLESS OTHERWISE NOTED (y = SWITCH LEG ID) |
| P,y | PILOT SWITCH, +48" A.F.F. UNLESS OTHERWISE NOTED (y = SWITCH LEG ID) |
| K,y | KEYED SWITCH, +48" A.F.F. UNLESS OTHERWISE NOTED (y = SWITCH LEG ID) |
| M,y | MOMENTARY CONTACT SWITCH, +48" A.F.F. UNLESS OTHERWISE NOTED (y = SWITCH LEG ID) |
| OCS y | OCCUPANCY SENSOR, +48" A.F.F. UNLESS OTHERWISE NOTED (# = OCCUPANCY SENSOR TYPE, y = SWITCH LEG ID) |
| LC | LIGHTING CONTACTOR |
| PC | PHOTOCELL ON ROOF |
| R | RELAY |
| X,y | WALL MOUNTED LIGHT FIXTURE (X = LIGHT FIXTURE TYPE, y = LIGHT SWITCH LEG ID) |
| X,y | WALL MOUNTED LIGHT FIXTURE (X = LIGHT FIXTURE TYPE, y = LIGHT SWITCH LEG ID) |
| X,y | TRACK MOUNTED LIGHT FIXTURE (X = LIGHT FIXTURE TYPE, y = LIGHT SWITCH LEG ID) |
| X,y | ROUND RECESSED CAN LIGHT FIXTURE (X = LIGHT FIXTURE TYPE, y = LIGHT SWITCH LEG ID) |
| X,y | SQUARE RECESSED CAN LIGHT FIXTURE (X = LIGHT FIXTURE TYPE, y = LIGHT SWITCH LEG ID) |
| X,y | SURFACE MOUNTED LIGHT FIXTURE (X = LIGHT FIXTURE TYPE, y = LIGHT SWITCH LEG ID) |
| X,y | PENDANT MOUNTED LIGHT FIXTURE (X = LIGHT FIXTURE TYPE, y = LIGHT SWITCH LEG ID) |
| X,y | STRIP LIGHT FIXTURE (X = LIGHT FIXTURE TYPE, y = LIGHT SWITCH LEG ID) |
| X,y | UNDERCABINET LIGHT FIXTURE (X = LIGHT FIXTURE TYPE, y = LIGHT SWITCH LEG ID) |
| X,y | PENDANT MOUNTED LIGHT FIXTURE (X = LIGHT FIXTURE TYPE, y = LIGHT SWITCH LEG ID) |
| X,y | SURFACE MOUNTED LIGHT FIXTURE (X = LIGHT FIXTURE TYPE, y = LIGHT SWITCH LEG ID) |
| X,y | WALL MOUNTED LIGHT FIXTURE (X = LIGHT FIXTURE TYPE, y = LIGHT SWITCH LEG ID) |
| | RECESSED LIGHT FIXTURE (X = LIGHT FIXTURE TYPE, y = LIGHT SWITCH LEG ID) |
| X,y | RECESSED LIGHT FIXTURE WITH EMERGENCY BALLAST (X = LIGHT FIXTURE TYPE, y = LIGHT SWITCH LEG ID) |
| X,#,EM CF #,y | CEILING FAN FIXTURE (CF # = LIGHT FIXTURE TYPE, y = SWITCH LEG ID) |
| X | POLE MOUNTED LIGHT FIXTURE (X = LIGHT FIXTURE TYPE) |
| X | GROUND MOUNTED LIGHT FIXTURE (X = LIGHT FIXTURE TYPE) |
| X | WALL MOUNTED EXIT LIGHT FIXTURE (X = LIGHT FIXTURE TYPE, ARROW INDICATES DIRECTION) +8'-0" A.F.F. UNLESS OTHERWISE NOTED |
| X | CEILING/PENDANT MOUNTED EXIT LIGHT FIXTURE (X = LIGHT FIXTURE TYPE, ARROW INDICATAES DIRECTION) |
| X | EXTERIOR WALL MOUNTED EMERGENCY EGRESS LIGHT FIXTURE (X = LIGHT FIXTURE TYPE) +7'-6" A.F.F. UNLESS OTHERWISE NOTED |
| X | WALL MOUNTED EMERGENCY LIGHT FIXTURE (X = LIGHT FIXTURE TYPE) +7'-6" A.F.F. UNLESS OTHERWISE NOTED |

POWER SYMBOLS:

| | |
|---|---|
| | SURFACE MOUNTED PANEL |
| | RECESSED PANEL |
| | ELECTRIC METER |
| | CONDUIT CONCEALED IN CEILING AND WALL CONSTRUCTION |
| | ELECTRICAL CIRCUIT HOMERUN |
| | GROUND BAR |
| | DUPLEX RECEPTACLE, +18" A.F.F. UNLESS OTHERWISE NOTED |
| | FOURPLEX RECEPTACLE, +18" A.F.F. UNLESS OTHERWISE NOTED |
| FDV | FLOOR BOX WITH DEVICES AS INDICATED |
| | DUPLEX RECEPTACLE MOUNTED FLUSH IN FACE OF CEILING, DEVICE AS NOTED |
| | SINGLE PLUG RECEPTACLE, +18" A.F.F. UNLESS OTHERWISE NOTED |
| | G4000 RACEWAY, +24" A.F.F. UNLESS OTHERWISE NOTED |
| | PLUGMOLD, +18" A.F.F. UNLESS OTHERWISE NOTED |
| | SPECIAL ELECTRICAL CONNECTION OR DEVICE AS NOTED |
| PP | POWER POLE |
| ED | ELECTRIC DRYER CONNECTION, NEMA 10-30R (VERIFY) +48" A.F.F. UNLESS OTHERWISE NOTED |
| RG | ELECTRIC RANGE CONNECTION, NEMA 10-50R (VERIFY) +8" A.F.F. UNLESS OTHERWISE NOTED |
| | RANGE HOOD CONNECTION |
| | ELECTRIC HAND DRYER CONNECTION, HEIGHT AS INDICATED IN SPECIFICATIONS |
| | MOTOR |
| ATS | AUTOMATIC TRANSFER SWITCH |
| MTS | MANUAL TRANSFER SWITCH |
| PS | POWER SUPPLY |
| | ENCLOSED SAFETY SWITCH |
| CB | ENCLOSED CIRCUIT BREAKER |
| TS | TIMESWITCH |
| T | BUCK-BOOST TRANSFORMER |
| VFD | VARIABLE FREQUENCY DRIVE |
| CD | CONTROL DAMPER |
| | PUSHBUTTON, FUNCTION AS INDICATED, +48" A.F.F. UNLESS OTHERWISE NOTED |
| B | DOORBELL, HEIGHT AS INDICATED |
| T | THERMOSTAT, +48" A.F.F. UNLESS OTHERWISE NOTED |
| UD | UP/DOWN/STOP CONTROL SWITCH, +48" A.F.F. UNLESS OTHERWISE NOTED |
| PB | START-STOP PUSHBUTTON WITH PILOT, +48" A.F.F. UNLESS OTHERWISE NOTED |
| C | SPEED CONTROL SUPPLIED BY MECHANICAL CONTRACTOR, INSTALLED BY ELECTRICAL CONTRACTOR. MOUNT ADJACENT TO OR INSIDE UNIT ENCLOSURE |

TELECOMMUNICATIONS SYSTEM SYMBOLS:

| | |
|---|---|
| | COMBINATION PHONE/DATA OUTLET (CONDUIT/BOX ONLY) +18" A.F.F. UNLESS OTHERWISE NOTED |
| M | WALL TELEPHONE OUTLET (CONDUIT/BOX ONLY) +48" A.F.F. UNLESS OTHERWISE NOTED |
| TV | TELEVISION OUTLET (CONDUIT/BOX ONLY) +18" A.F.F. UNLESS OTHERWISE NOTED |
| AV | DOUBLE DEEP JUNCTION BOX FOR AUDIO/VISUAL OUTLETS (CONDUIT/BOX ONLY) +18" A.F.F. UNLESS OTHERWISE NOTED |
| J | JUNCTION BOX (CONDUIT/BOX ONLY), +18" AF.F. UNLESS OTHERWISE NOTED |

FIRE ALARM SYSTEM SYMBOLS:

| | |
|---|---|
| S | PHOTOELECTRIC SMOKE DETECTOR |
| H | COMBINATION FIXED 135°F/RATE OF RISE HEAT DETECTOR |
| H MT | FIXED 200°F HEAT DETECTOR |
| S D | DUCT SMOKE DETECTOR |
| A | DUCT DETECTOR REMOTE TEST STATION AND INDICATOR |
| | FIRE ALARM HORN/STROBE, +80" A.F.F. UNLESS OTHERWISE NOTED |
| | FIRE ALARM SPEAKER/STROBE, +80" A.F.F. UNLESS OTHERWISE NOTED |
| | FIRE ALARM STROBE, +80" A.F.F. UNLESS OTHERWISE NOTED |
| ES | EXTERIOR SPRINKLER ALARM HORN/STROBE, +10'-0" A.F.F. UNLESS OTHERWISE NOTED |
| | WEATHERPROOF FIRE ALARM HORN, +10'-0" A.F.F. UNLESS OTHERWISE NOTED |
| F | MANUAL FIRE ALARM PULL STATION, +48" A.F.F. UNLESS OTHERWISE NOTED |
| FS | FLOW SWITCH |
| TS | TAMPER SWITCH |
| DH | DOOR HOLD OPEN |
| DC | DOOR CLOSER |
| FSD | FIRE/SMOKE DAMPER |
| SD | SMOKE DAMPER |
| FA | FIRE PROTECTION PRE-ACTION CONTROL VALVE |

SECURITY SYSTEM SYMBOLS:

| | |
|---|---|
| KP | SECURITY KEY PAD, +48" A.F.F. UNLESS OTHERWISE NOTED |
| CR | PROXIMITY CARD READER, +48" A.F.F. UNLESS OTHERWISE NOTED (M DESIGNATES MULLION MOUNTED) |
| DP | DOOR POSITION SWITCH MOUNTED IN DOOR FRAME |
| EH | ELECTRIC HINGE MOUNTED IN DOOR FRAME |
| ES | ELECTRIC STRIKE MOUNTED IN DOOR FRAME |
| EL | ELECTRIC LOCK MOUNTED IN DOOR FRAME |
| ML | MAGNETIC LOCK MOUNTED IN DOOR FRAME |
| | CAMERA, HEIGHT AS NOTED |
| REX | REQUEST TO EXIT MOUNTED AT TOP OF DOOR FRAME |
| MS | MOTION SENSOR |
| M | CCTV MONITOR |
| OD | OVERHEAD DOOR CONTROL |
| PB | PANIC BUTTON |
| DVR | DIGITAL VIDEO RECORDER |
| WT | WATCH TOUR (CARD READER WITH LED) |
| | DOOR RELEASE PUSHBUTTON, +48" A.F.F. UNLESS OTHERWISE NOTED |

INTERCOM SYSTEM SYMBOLS:

| | |
|---|---|
| VC | VOLUME CONTROL SWITCH, +48" A.F.F. UNLESS OTHERWISE NOTED |
| CB | CALL BACK SWITCH, +48" A.F.F. UNLESS OTHERWISE NOTED |
| C M | WALL MOUNTED INTERCOM STATION, HEIGHT AS NOTED (M DESIGNATES MULLION MOUNTED) |
| | WEATHERPROOF PA HORN, +10'-0" A.F.F. UNLESS OTHERWISE NOTED |
| M | MICROPHONE OUTLET - INTERVIEW SYSTEM |
| SP | CEILING MOUNTED SPEAKER |
| SP | WALL MOUNTED SPEAKER, HEIGHT AS NOTED |

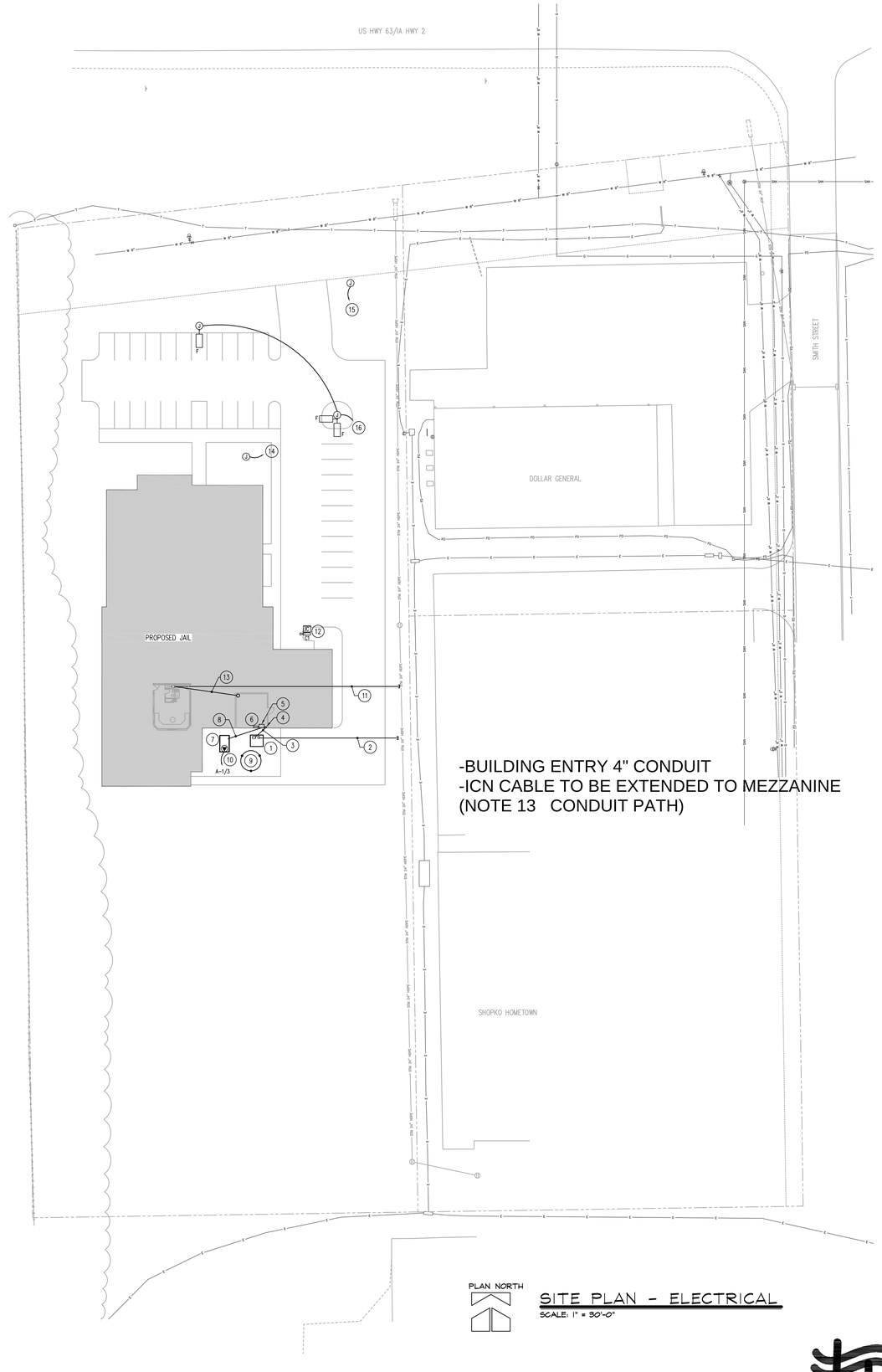


PLAN NORTH

## SITE PLAN - ELECTRICAL

SCALE: 1" = 30'-0"

## GENERAL NOTES:

1. COORDINATE LOCATION/INSTALLATION OF MECHANICAL AND ELECTRICAL WORK WITH ALL OTHER TRADES. NO ASPECT OF A SYSTEM INSTALLATION OR ITS ROUGH-IN SHALL COMMENCE UNTIL PROPER AND TIMELY COORDINATION WITH ALL TRADES ASSOCIATED WITH THE INSTALLATION HAS TRANSPIRED. ITEMS TO BE COORDINATED SHALL INCLUDE, BUT NOT BE LIMITED TO: BUILDING STRUCTURE, SHEET METAL, ALL PIPING SYSTEMS, LIGHT FIXTURES, CONDUITS, CABLE TRAYS, WORK ABOVE LAY-IN CEILINGS, ETC. REFER TO ALL GENERAL, MECHANICAL, AND ELECTRICAL DRAWINGS AND SPECIFICATIONS FOR THIS PROJECT.
2. UNDERGROUND FACILITIES HAVE BEEN SHOWN BASED UPON INFORMATION OBTAINED FROM FIELD LOCATIONS BY UTILITY COMPANIES, AVAILABLE SURVEYS, AND RECORDS. LOCATIONS ARE APPROXIMATE ONLY. OTHER UNDERGROUND FACILITIES THAT ARE NOT SHOWN MAY EXIST. CONTRACTOR IS RESPONSIBLE TO VERIFY THE EXACT LOCATION AND TYPE OF UNDERGROUND FACILITIES ON THE SITE. CONTACT IOWA ONE CALL A MINIMUM OF 48 HOURS PRIOR TO ANY EXCAVATION TO LOCATE UNDERGROUND UTILITIES. IF A PROBLEM OR INTERFERENCE EXISTS, NOTIFY ARCHITECT/ENGINEER BEFORE PROCEEDING.
3. THE ELECTRICAL CONTRACTOR SHALL COORDINATE ELECTRICAL SERVICE REQUIREMENTS WITH THE LOCAL UTILITY COMPANY AND INCLUDE ALL LABOR AND MATERIALS FOR A COMPLETE OPERATING SYSTEM. COORDINATION SHALL INCLUDE, BUT NOT BE LIMITED TO, REQUIREMENTS FOR TRANSFORMER CONNECTIONS, CONCRETE TRANSFORMER PADS, METER SOCKETS, PRIMARY CABLE RACEWAY, SECONDARY SERVICE, AND METERING TRANSFORMERS.
4. THE ELECTRICAL CONTRACTOR SHALL VERIFY THE AVAILABLE FAULT CURRENT WITH THE LOCAL UTILITY COMPANY PRIOR TO SUBMITTING BID. ADJUST A.I.C. RATINGS OF ALL OVERCURRENT PROTECTION DEVICES AS REQUIRED IN DISTRIBUTION EQUIPMENT TO COORDINATE WITH AVAILABLE FAULT CURRENT.

## KEYED NOTES:

1. PAD MOUNT TRANSFORMER WITH BUS MOUNTED CT'S BY UTILITY COMPANY. CONCRETE PAD BY GENERAL CONTRACTOR. COORDINATE INSTALLATION AND LOCATION WITH UTILITY COMPANY. REFER TO TRANSFORMER PAD DETAIL 3/E6.1.
2. EXTEND, CAP AND STAKE (2) 4" SCHEDULE 40 TYPE DB PVC CONDUITS FROM PRIMARY SIDE OF UTILITY TRANSFORMER TO LOCATION AS DIRECTED BY SOUTHERN IOWA ELECTRIC COOP. COORDINATE WITH SOUTHERN IOWA ELECTRIC COOP.
3. SECONDARY CONDUIT AND CONDUCTORS TO MAIN BREAKER BY ELECTRICAL CONTRACTOR. REFER TO RISER DIAGRAM ON DRAWING E7.1
4. MAIN BREAKER.
5. AUTOMATIC TRANSFER SWITCH.
6. MAIN DISTRIBUTION PANEL.
7. EMERGENCY GENERATOR. CONCRETE PAD BY GENERAL CONTRACTOR. COORDINATE REQUIREMENTS AND INSTALLATION.
8. GENERATOR FEEDER CIRCUIT. REFER TO RISER DIAGRAM ON DRAWING E7.1.
9. GROUND RING. SEE SPECIFICATIONS AND DETAIL 2/E6.1.
10. ENGINE BLOCK HEATER.
11. EXTEND AN EMPTY 4" CONDUIT FROM TELEPHONE TERMINAL BOARD IN CONTROL ROOM MEZZANINE TO LOCATION SHOWN. VERIFY EXACT LOCATION WITH UTILITY COMPANY.
12. WEATHERPROOF INTERCOM STATION WITH CAMERA ON POST FOR PRISONER DROP-OFF. VERIFY POST CONFIGURATION AND LOCATION.
13. EXTEND AN EMPTY 4" CONDUIT FROM TELEPHONE TERMINAL BOARD IN CONTROL ROOM MEZZANINE TO MECHANICAL VS3.
14. EXTEND AN EMPTY 1" CONDUIT TO PANEL A FOR FUTURE FLAG POLE LIGHTS.
15. EXTEND AN EMPTY 1" CONDUIT TO PANEL A FOR FUTURE MONUMENT SIGN LIGHTING.
16. EXTEND AN EMPTY 1" CONDUIT TO PANEL A FOR FUTURE PARKING LOT POLE LIGHTING.


Twin Rivers Engineering Consultants
1000 Illinois Street
Des Moines, Iowa 50314
Phone: 515-288-3679 Fax: 515-288-4012
Twin Rivers Project #: 15031.00



Rick A. Weidner, AIA
14713 Ernst Street
Bennington, Nebraska 68007
Phone: 402-871-6537
Email: weidnerarch@cox.net


CONSTRUCTION DOCUMENTS FOR
# DAVIS COUNTY LAW ENFORCEMENT CENTER
BLOOMFIELD, IOWA


DESIGN AND CONSTRUCTION DOCUMENTS ARE INSTRUMENTS OF SERVICE AND REMAIN THE PROPERTY OF THE ARCHITECT. THIS DOCUMENT AND THE INFORMATION CONTAINED HEREIN MAY NOT BE REPRODUCED OR EXCERPTED FROM WITHOUT EXPRESS WRITTEN PERMISSION FROM THE OFFICE OF RICK A. WEIDNER, AIA. UNAUTHORIZED DISCLOSURE OR CONSTRUCTION USE ARE PROHIBITED BY COPYRIGHT LAW.


| | |
|---|---|
| ISSUED | OCTOBER 26, 2015 |
| REVISIONS | |

SHEET NO.

E1.1

# HANDHOLE PLACEMENT TYPICAL

24" X 36" X 30" NEW BASIS HAND HOLE

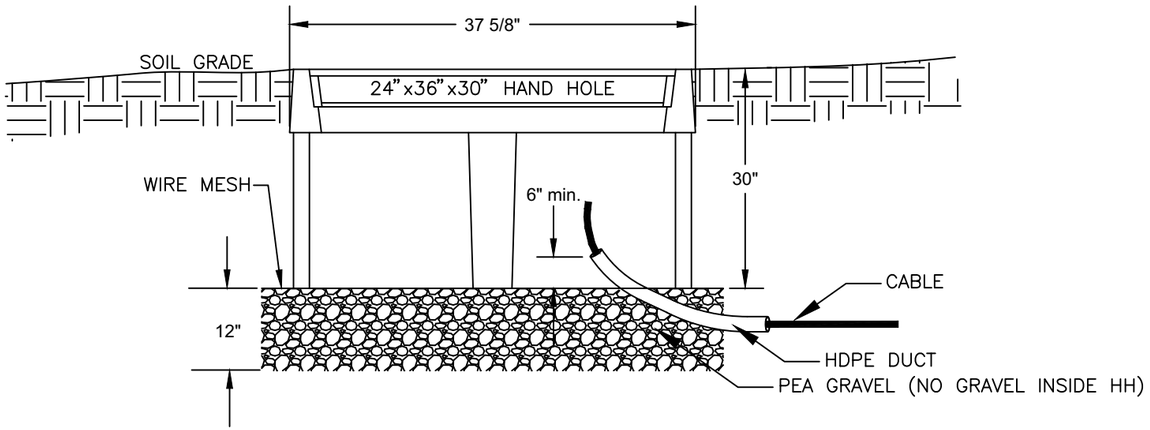


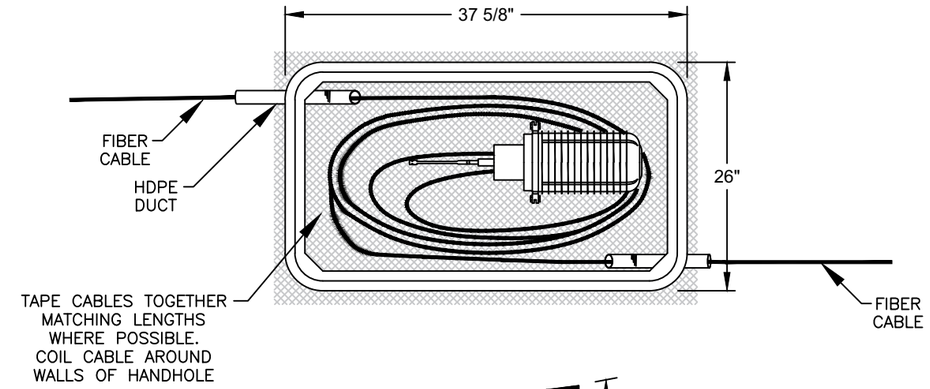


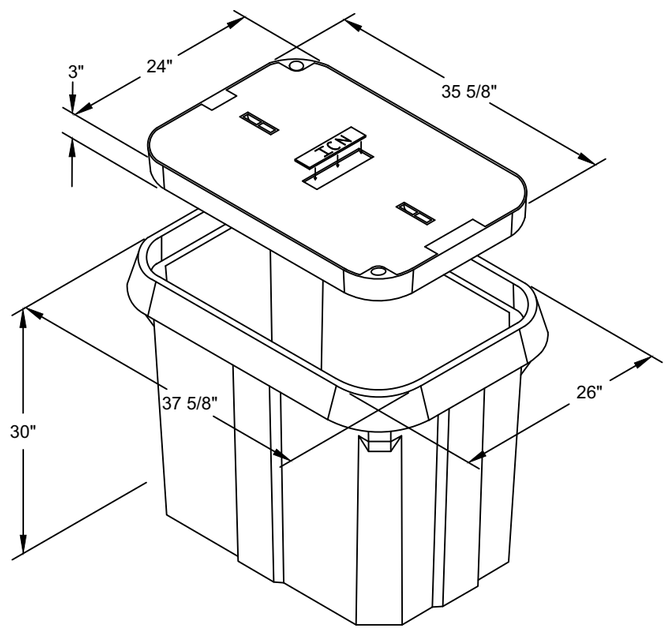


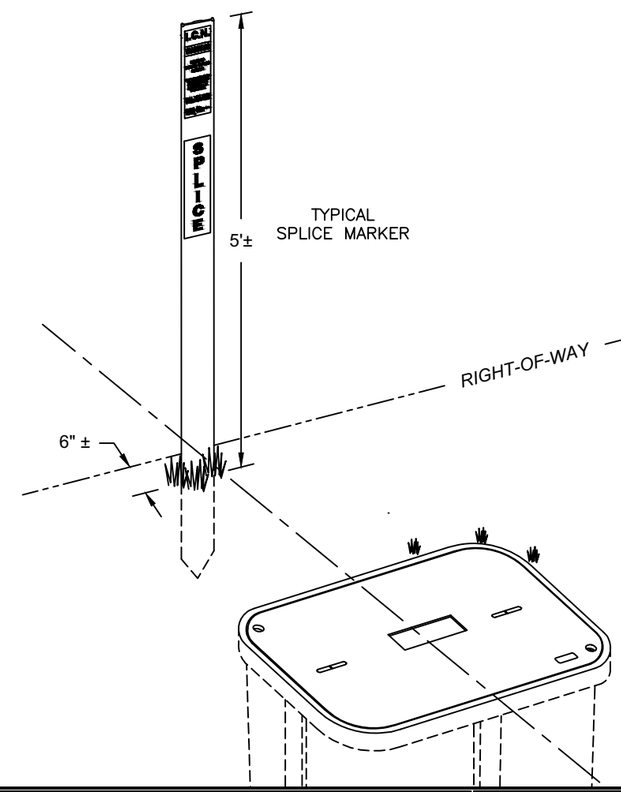


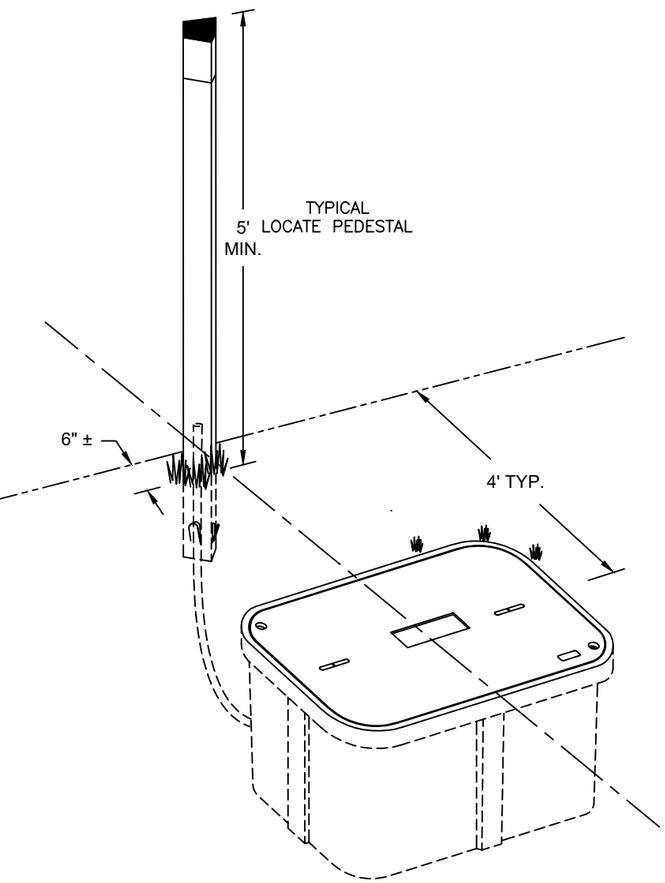


IOWA COMMUNICATIONS NETWORK
GRIMES STATE OFFICE BUILDING
400 EAST 14TH STREET
DES MOINES, IOWA 50319
ICN© 2014, COPY WITH PERMISSION

THIS DRAWING IS PROVIDED FOR GENERAL INFORMATION ONLY AND IS NOT TO BE USED TO DETERMINE PRECISE ICN PLACEMENT. CALL ONE CALL BEFORE EXCAVATION (1-800-292-8989 OR 811)

CONSTRUCTION DETAIL
HANDHOLE TYPICAL – NEW BASIS PC243630SN20
24" x 36" x 30"

TYPICAL HANDHOLE | SCALE: NONE | SIZE: 11 x 17

| | | | | | |
|---|---|---|---|---|---|
| 1 | REVISION | 3-27-12 | 5 | | |
| 2 | REVISION | 7-16-14 | 6 | | |
| 3 | REVISION | 11-10-14 | 7 | | |
| 4 | REVISION | 8-21-15 | 8 | | |

O:\AutoCAD Standards\TYPICALS\TYPICAL-HH PLACEMENT.dwg

# TYPICAL INSTALLATION OF TRI-VIEW LOCATE PEDESTAL

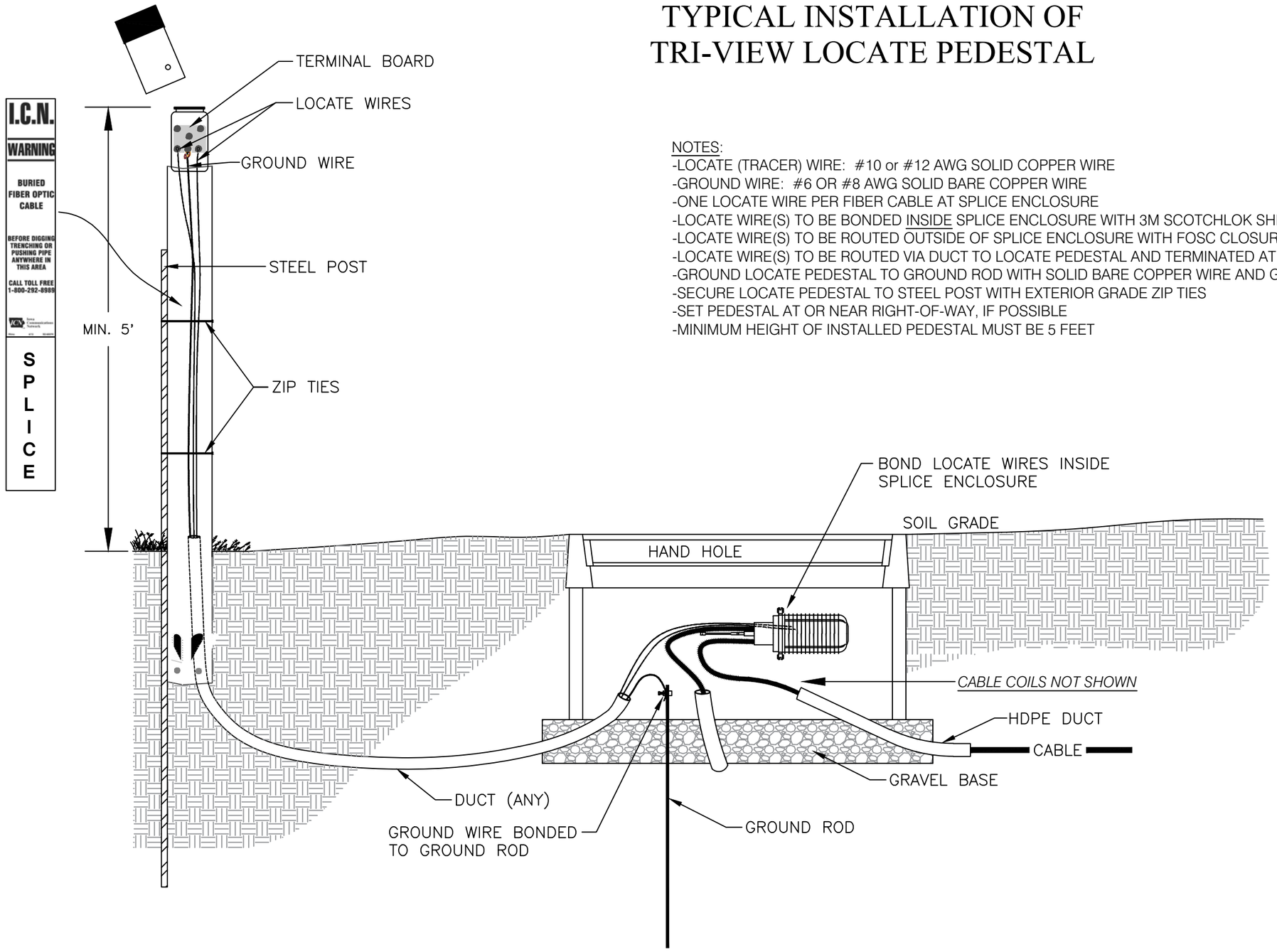


NOTES:
-LOCATE (TRACER) WIRE: #10 or #12 AWG SOLID COPPER WIRE
-GROUND WIRE: #6 OR #8 AWG SOLID BARE COPPER WIRE
-ONE LOCATE WIRE PER FIBER CABLE AT SPLICE ENCLOSURE
-LOCATE WIRE(S) TO BE BONDED INSIDE SPLICE ENCLOSURE WITH 3M SCOTCHLOK SHIELD BONDING KIT
-LOCATE WIRE(S) TO BE ROUTED OUTSIDE OF SPLICE ENCLOSURE WITH FOSC CLOSURE SEALING KIT
-LOCATE WIRE(S) TO BE ROUTED VIA DUCT TO LOCATE PEDESTAL AND TERMINATED AT TERMINAL BOARD
-GROUND LOCATE PEDESTAL TO GROUND ROD WITH SOLID BARE COPPER WIRE AND GROUND CLAMP
-SECURE LOCATE PEDESTAL TO STEEL POST WITH EXTERIOR GRADE ZIP TIES
-SET PEDESTAL AT OR NEAR RIGHT-OF-WAY, IF POSSIBLE
-MINIMUM HEIGHT OF INSTALLED PEDESTAL MUST BE 5 FEET

TRACER WIRE TERMINATION DETAIL

Termination of the locate wire at either a pedestal, puck, or in a splice case shall be made in the following fashion:

Strip off a minimum of ¾" of insulation. Using a needle nose pliers bend a wire "eyelet" on the wire end in a clockwise manner. Use a flat washer on both sides of the wire eyelet when cinching it down on the stud. Flat washers shall be of appropriate size such that the hole matches the diameter of the stud and the outside diameter of the flat washer matches reasonably close to the eyelet diameter.

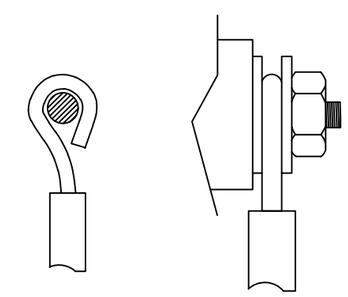

IOWA COMMUNICATIONS NETWORK
GRIMES STATE OFFICE BUILDING
400 EAST 14TH STREET
DES MOINES, IOWA 50319
ICN© 2014, COPY WITH PERMISSION

THIS DRAWING IS PROVIDED FOR GENERAL INFORMATION ONLY AND IS NOT TO BE USED TO DETERMINE PRECISE ICN PLACEMENT. CALL ONE CALL BEFORE EXCAVATION (1-800-292-8989 OR 811)

CONSTRUCTION DETAIL
LOCATE PEDESTAL TYPICAL
TRI-VIEW W/ISO LEVER
TYPICAL LOCATE PEDESTAL | SCALE: NONE | SIZE: 11 x 17

| | | | | | |
|---|---|---|---|---|---|
| 1 | FOR CONSTRUCTION | 11-3-14 | 5 | | |
| 2 | UPDATE | 3-13-15 | 6 | | |
| 3 | REVISION | 8-21-15 | 7 | | |
| 4 | REVISION | 9-4-15 | 8 | | |

O:\AutoCAD Standards\TYPICALS\TYP_LOCATE PEDS.dwg

# TYPICAL INSTALLATION OF HIDE-OUT LOCATE STATION

NOTES:
-LOCATE (TRACER) WIRE: #10 or #12 AWG SOLID COPPER WIRE
-GROUND WIRE: #6 OR #8 AWG SOLID BARE COPPER WIRE
-ONE LOCATE WIRE PER CABLE AT SPLICE ENCLOSURE
-LOCATE WIRE(S) TO BE BONDED INSIDE SPLICE ENCLOSURE WITH 3M SCOTCHLOK SHIELD BONDING KIT
-LOCATE WIRE(S) TO BE ROUTED OUTSIDE OF SPLICE ENCLOSURE WITH FOSC CLOSURE SEALING KIT
-LOCATE WIRE(S) TO BE ROUTED VIA DUCT TO LOCATE PEDESTAL AND TERMINATED AT TERMINAL BOARD
-GROUND LOCATE STATION TO GROUND ROD WITH COPPER WIRE AND GROUND CLAMP
-SET LOCATE STATION APPROXIMATELY 18-INCHES FROM THE HANDHOLE OR STRUCTURE

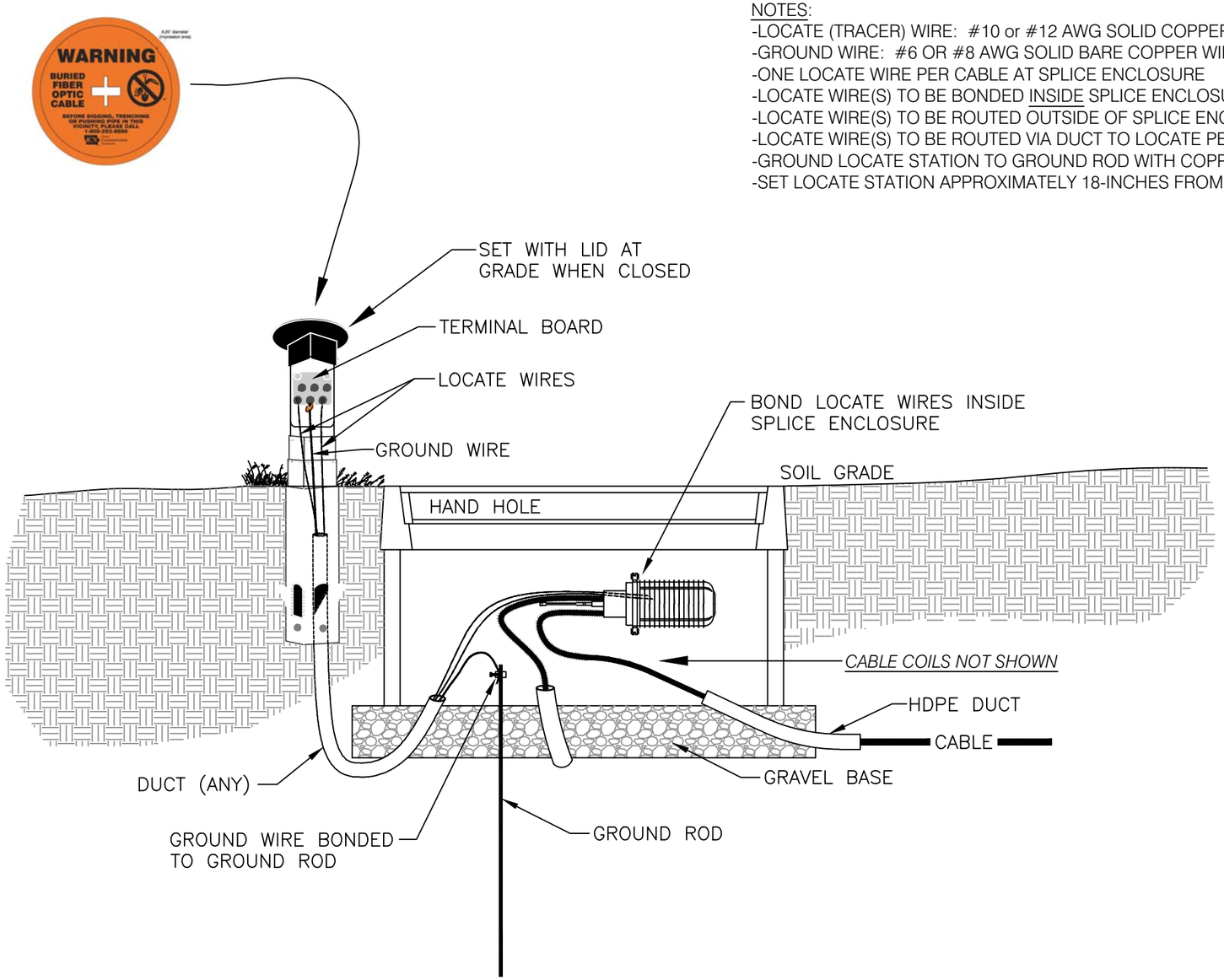


TRACER WIRE TERMINATION DETAIL

Termination of the locate wire at either a pedestal, puck, or in a splice case shall be made in the following fashion:

Strip off a minimum of ¾" of insulation. Using a needle nose pliers bend a wire "eyelet" on the wire end in a clockwise manner. Use a flat washer on both sides of the wire eyelet when cinching it down on the stud. Flat washers shall be of appropriate size such that the hole matches the diameter of the stud and the outside diameter of the flat washer matches reasonably close to the eyelet diameter.

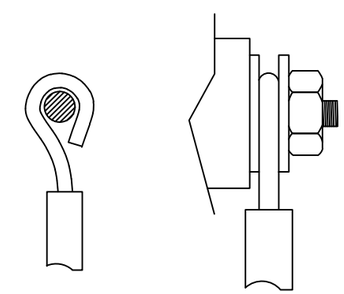

IOWA COMMUNICATIONS NETWORK
GRIMES STATE OFFICE BUILDING
400 EAST 14TH STREET
DES MOINES, IOWA 50319
ICN© 2014, COPY WITH PERMISSION

THIS DRAWING IS PROVIDED FOR GENERAL INFORMATION ONLY AND IS NOT TO BE USED TO DETERMINE PRECISE ICN PLACEMENT. CALL ONE CALL BEFORE EXCAVATION (1-800-292-8989 OR 811)

CONSTRUCTION DETAIL
LOCATE PEDESTAL TYPICAL
RHINO HIDEOUT
TYPICAL LOCATE PEDESTAL | SCALE: NONE | SIZE: 11 x 17

| | | | | | |
|---|---|---|---|---|---|
| 1 | FOR CONSTRUCTION | 11-3-14 | 5 | REVISION | 12-28-15 |
| 2 | UPDATE | 3-13-15 | 6 | | |
| 3 | REVISION | 8-21-15 | 7 | | |
| 4 | REVISION | 9-4-15 | 8 | | |

O:\AutoCAD Standards\TYPICALS\TYP_LOCATE PEDS.dwg