PART 2 - PRODUCTS

2.01 FABRIC

A. **General:** Provide fence fabric manufactured from wire meeting the requirements of ASTM A 817. Use No. 9 gauge wire woven in a 2 inch mesh. Construct knuckled selvedge at the top and bottom of the fabric.

B. **Zinc-coated Fabric:** Comply with ASTM A 392.

1. **Wire Coated Prior to Weaving:** Use Type II, Class 5 zinc coating per ASTM A 817.

2. **Fabric Coated After Weaving:** Use Class 2 coating per ASTM A 392.

C **Aluminum-coated Fabric:** Meet the requirements of ASTM A 491. Coat wire prior to weaving fabric per ASTM A 817, Type I coating.

D. **PVC-coated Fabric:** Comply with ASTM F 668, Class 2b.

1. Apply PVC coating to zinc or aluminum-coated wire prior to weaving fabric.

2. PVC coating color as specified in the contract documents, complying with ASTM F 934.

2.02 POSTS, RAILS, AND BRACES

A. Standard weight (Schedule 40) pipe complying with ASTM F 1083.

1. Galvanize pipe inside and out.

2. Unless otherwise specified in the contract documents, provide the following nominal sizes for the respective uses:

Post Use	Fence Height		
	48" and under (nominal diameter)	48" to 96" (nominal diameter)	Greater than 96" (nominal diameter)
Line Post	2"	2 1/2"	3"
Terminal Post*	2 1/2"	3"	4"
Top/intermediate Rail Braces	1 1/4"	1 1/4"	1 1/4"
Gate Post	Refer to contract documents and ASTM F 900		
*Includes corner, angle, end, and pull posts.			

B. Pipe meeting the requirements of ASTM F 1043, Group 1A (Type A coating) or Group 1C (Type B coating). Use nominal sizes specified in ASTM F 1043.

C. When PVC-coated fence is specified in the contract documents, coat all posts, rails, and braces with a PVC-coated finish according to ASTM F 1043.

1. Zinc-coated post per ASTM F 1083 prior to application of PVC coating.

2. Color as specified in the contract documents, complying with ASTM F 934.

D. Ensure all posts, rails, and braces provided for a given section of fence have similar coatings and shapes.

E. Provide caps for all posts. Comply with ASTM F 626.

2.03 FITTINGS

A. Comply with ASTM F 626.

B. Provide attachments to connect braces to posts by fittings that will hold both post and brace rigidly.

C. Provide 3/8 inch diameter round steel diagonal tension rods with an appropriate commercial means for tightening. Provide a locknut or other device to hold the tightening device in place.

D. Provide a suitable sleeve or coupling device, recommended by the manufacturer, to connect sections of top rail and provide for expansion and contraction.

E. Use stretcher (tension) bars of the size specified in ASTM F 626 with suitable bands for attaching fabric to corner, end, or gate posts.

2.04 TIE WIRE AND TENSION WIRE

A. Tie Wire: Provide tie wires for chain link fence that are the size and type the manufacturer recommends, but no smaller than No. 9 diameter for post ties or No. 12 diameter for rail and brace ties. Comply with ASTM F 626.

B. Tension Wire: Comply with ASTM A 824, with Type I or Type II (Class 3) coating per ASTM A 817.

2.05 BARBED WIRE SUPPORTING ARMS

A. Comply with ASTM F 626 for type of arm configuration specified in the contract documents, as listed below:
   1. Type I: Single slanted arm for three barbed wire strands.
   2. Type II: Single vertical arm for three barbed wire strands.
   3. Type III: V-shaped arm for six barbed wire strands.
   4. Type IV: A-shaped arm for five barbed wire strands.

B. Anchor arms to line, end, corner, and pull posts

2.06 BARBED WIRE

Comply with ASTM A 121, design number 12-4-5-14R, Type A or Type Z (Class 3) coating.

2.07 GATES

A. Provide the type, height, and width of gates as specified in the contract documents.

B. Comply with ASTM F 900.

C. Provide coating on gate, gate posts, and fabric as required for adjacent fence.

2.08 CONCRETE

Provide concrete materials complying with Section 6010.

2.09 ELECTRICAL GROUND

A. Ground Rod: 5/8 inch diameter, 8 foot long copper-clad rod.

B. Ground Wire: No. 6 AWG bare copper wire.

PART 3 - EXECUTION

3.01 CHAIN LINK FENCE INSTALLATION

A. General: Comply with ASTM F 567. Construct fence at the location and height specified in the contract documents.

B. Posts:

1. **Post Location:**
   a. Place posts in the line of the fence with equal spacing not to exceed 10 feet on center.
   b. Set terminal (end, corner, and gate) posts at the beginning and end of each continuous length of fence and at abrupt changes in vertical and horizontal alignments. Place pull posts so that no more than 300 linear feet of fence is constructed with only line posts.

2. **Post Setting:**
   a. Dig or drill post holes to the dimensions specified in the contract documents.
   b. Set posts in concrete. Ensure all posts are set plumb in a vertical position.
   c. Form top of concrete footing so it extends 1 inch above grade and is sloped to direct water away from the post. To prevent frost heave, ensure footing is a uniform size to full depth without flare at the top of grade.
   d. Install posts no less than 24 hours prior to installation of fabric.
   e. Set terminal, corner, angle, pull, and gate posts with the required brace-post assembly as specified in the contract documents.

C. Rails:

1. **Top Rail:** Pass the top rail through the base of the line post caps to form a continuous brace from end to end of each stretch of fence. Join rail sections with sleeve or coupling device to allow for expansion and contraction. Securely fasten the top rail to the terminal posts with pressed steel connectors.

2. **Intermediate Rail:** Securely fasten the intermediate rail between all line posts and terminal posts with pressed steel fasteners. Intermediate rail is required only on fences 8 feet tall and taller.

D. Braces:

1. Securely fasten braces to the post by means of malleable iron or pressed steel connections; then truss from the line post back to the end, gate, or corner post.

2. Tighten the diagonal tension rod (truss rod) to produce proper tension.

E. Fabric:

1. Install fabric on the outside of the posts from the area being fenced or on the roadway side of the posts.

2. Secure one end of the fabric by a stretcher bar inserted in the final link of the fabric. Pull fabric taut with bottom selvedge, 2 inches above grade, before making attachment elsewhere.

3. Tighten and secure each end of each run of chain link fabric by a stretcher bar inserted in the final link of the fabric. Secure stretcher bar to the end post by tension bands equally spaced no more than 15 inches apart.

4. Attach fence fabric securely to the braces, top rail, tension wire, and all intermediate posts with wire ties or bands at intervals of no more than 12 inches.

3.01 CHAIN LINK FENCE INSTALLATION (Continued)

F. Bottom Tension Wire:

1. Install bottom tension wire on fence 5 feet high and taller.

2. Stretch bottom tension wire taut from terminal post to terminal post and securely fasten to each intermediate post within the bottom 6 inches of fabric.

G. Barbed Wire (When Specified):

1. Install 3 parallel wires on each barbed wire supporting arm on the outside of the area being secured, unless otherwise specified in the contract documents.

2. Pull wires taut, without kinks or twists, for tension.

H. Gates: Install gates as specified in the contract documents.

I. Electrical Grounds:

1. Install electrical grounds as specified in the contract documents at the following locations:
   a) Where a primary electrical transmission line (not a secondary feeder line for individual service) passes over the fence. Also install the ground on the fence at a distance of 25 to 50 feet in each direction from the crossing.
   b) Where the fence is adjacent to and within 50 feet of a primary electrical transmission line, install the ground at 500 foot maximum intervals.
   c) In at least one location on each applicable straight section of fence.

2. Drive ground rod vertically until the top is 6 inches below the ground surface.

3. Clamp ground wire to the rod and to the fence in such a manner that each element of the fence is grounded.

~~3.02 REMOVAL OF EXISTING FENCE~~

~~Remove all fences, including posts and footings, within work areas unless otherwise specified in the contract documents. Remove fence to first line post beyond construction limits. Replace items damaged from Contractor's operations with new materials, at no additional cost to the Contracting Authority.~~

~~3.03 TEMPORARY FENCE~~

~~A. Furnish and install chain link fence fabric, posts, ties, and other materials for the height specified in the contract documents.~~

~~B. Install according to permanent fence installation specifications, with the following exceptions:~~

~~1. Drive posts into the ground. Do not set posts in concrete except at corner or temporary gate posts.~~

~~2. Top rail, tension wire, and bracing will not be required.~~

~~C. Remove temporary fence and materials when no longer necessary. Place suitable backfill material in post holes. Fence materials will remain the property of the Contractor and removed from the site.~~

END OF SECTION

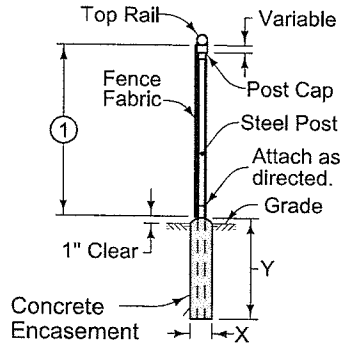

POST INSTALLATION

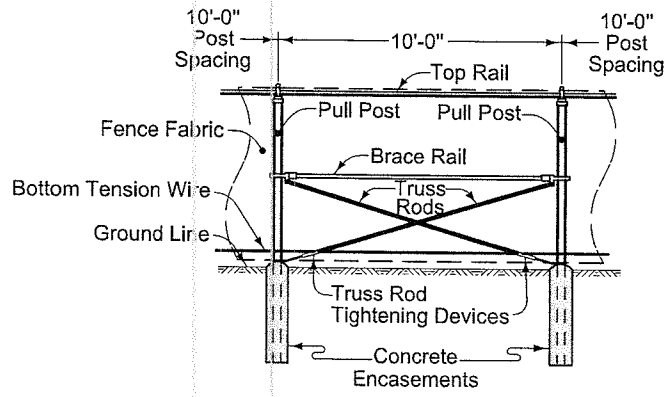

PULL POST INSTALLATION

Place fence fabric on roadway side of post. For certain curves, stream crossings, or other locations, the Contractor has the option to place fabric on the side of the post away from the roadway.

1. Fabric width as specified in the contract documents.
2. For fence heights greater than 8 feet, the depth of the fence post footing is 3 feet plus 3 inches for each 1 foot in height over 8 feet.
3. Install the fence on the roadway side of the right-of-way when specified in the contract documents.

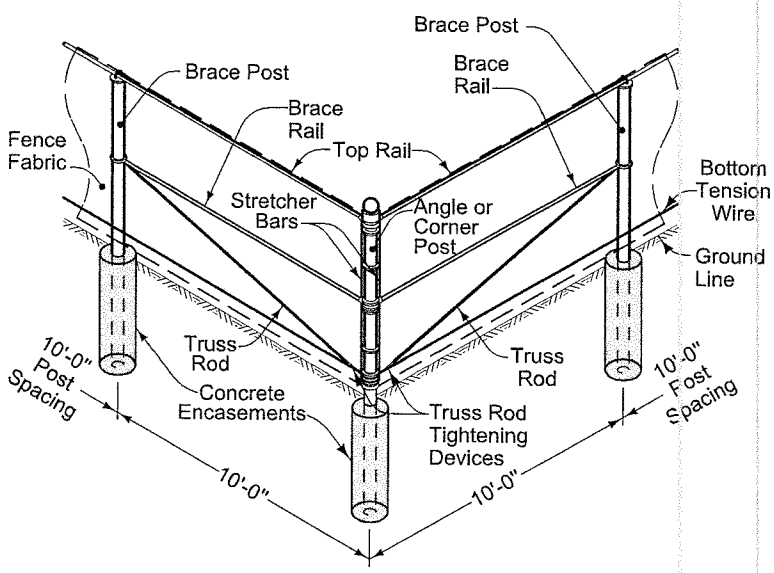

ANGLE OR CORNER POST INSTALLATION

FENCE POST FOOTING DEPTH AND DIAMETER

USE IN FENCE	FENCE HEIGHT					
	4'-0" and less		Over 4'-0" to 8'-0"		Over 8'-0"	
	X	Y	X	Y	X	Y
Line and Brace Posts	0'-8"	3'-0"	0'-10"	3'-0"	1'-0"	2
Terminal Post*	0'-10"	3'-0"	1'-0"	3'-0"	1'-4"	2
*Includes corner, angle, end, and pull posts.						

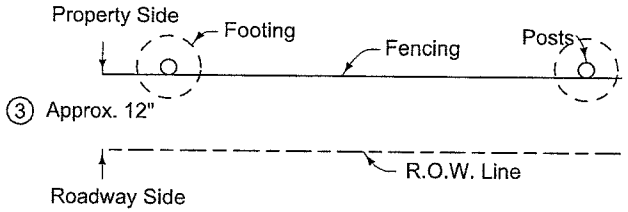

PLAN OF FENCE

SUDAS

REVISION New 10-18-11

9060.101

SHEET 1 of 2

SUDAS Standard Specifications

CHAIN LINK FENCE

FIGURE 9060.101 SHEET 1 OF 2

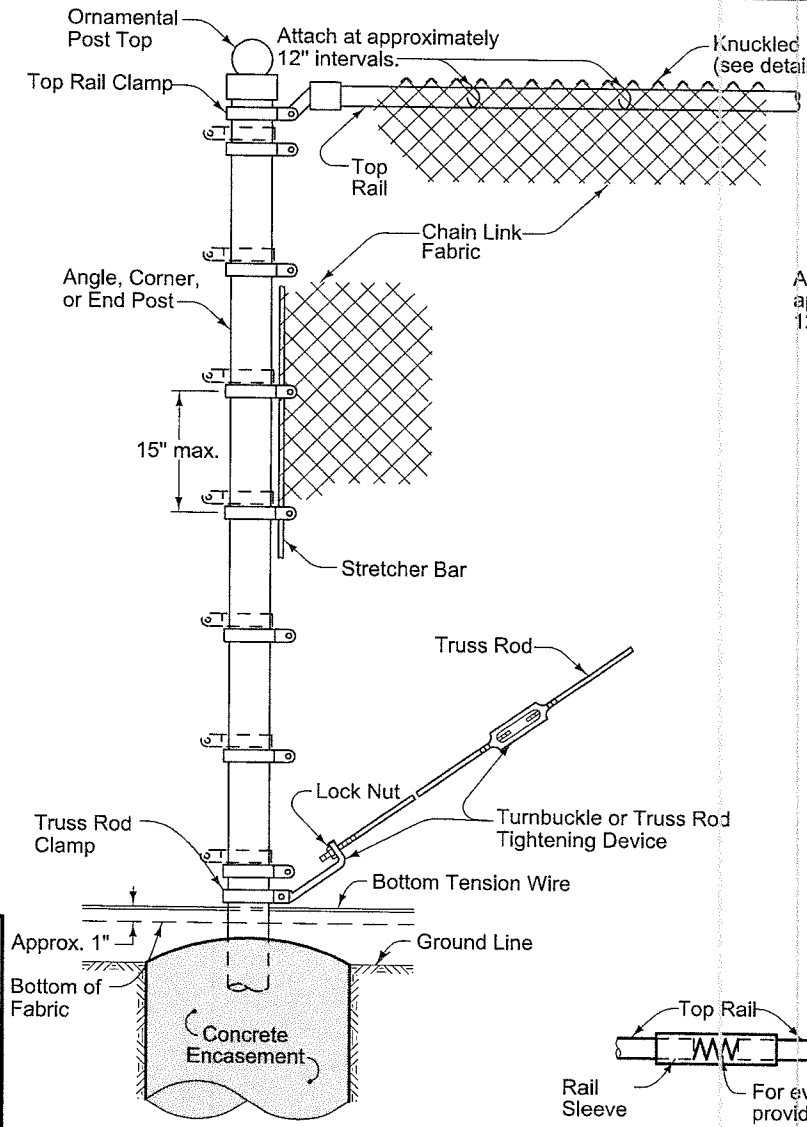

ANGLE, CORNER, OR END POST ASSEMBLY

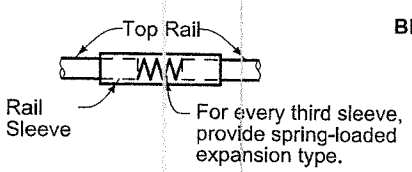

RAIL SLEEVE

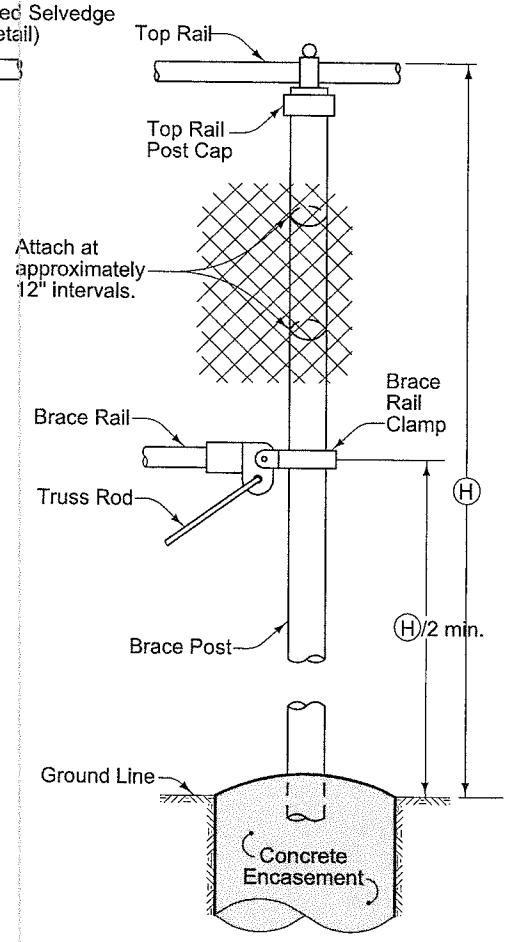

BRACE POST ASSEMBLY

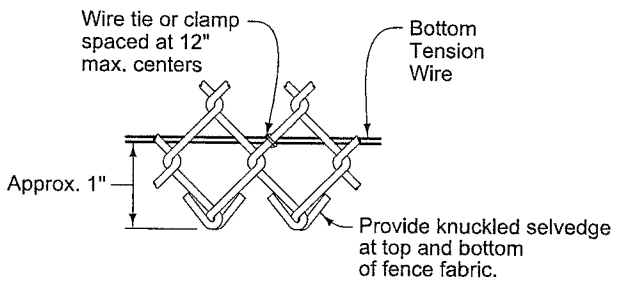

BOTTOM TENSION WIRE AND KNUCKLED SELVEDGE

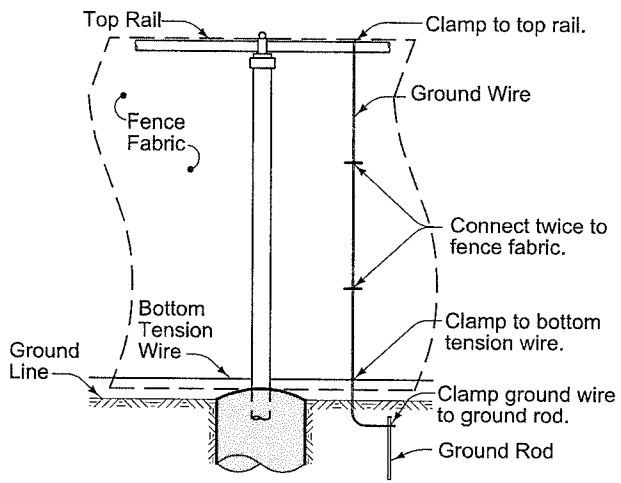

GROUND ROD INSTALLATION

FIGURE 9060.101 | SHEET 2 OF 2

SUDAS

REVISION	
New	10-18-11

9060.101

SHEET 2 of 2

SUDAS Standard Specifications

CHAIN LINK FENCE

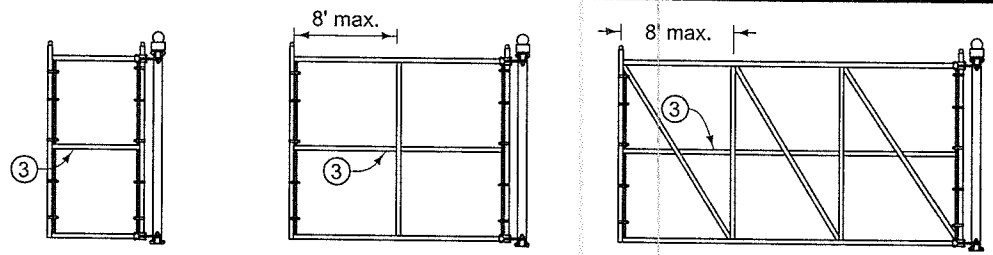

8' AND LESS

OVER 8' UP TO 16'

OVER 16' UP TO 18'

FRAME PATTERNS FOR VARIOUS GATE OPENINGS

1. Double swing gate is required only for widths greater than 16 feet. Exact details of gate design are subject to approval of the Engineer. Furnish gate with approved stop, latch, and means for locking. Install as recommended by the manufacturer.
2. End post used to terminate run of fence if no gate is proposed.
3. Horizontal members are required only if the fabric height is 8 feet or greater.

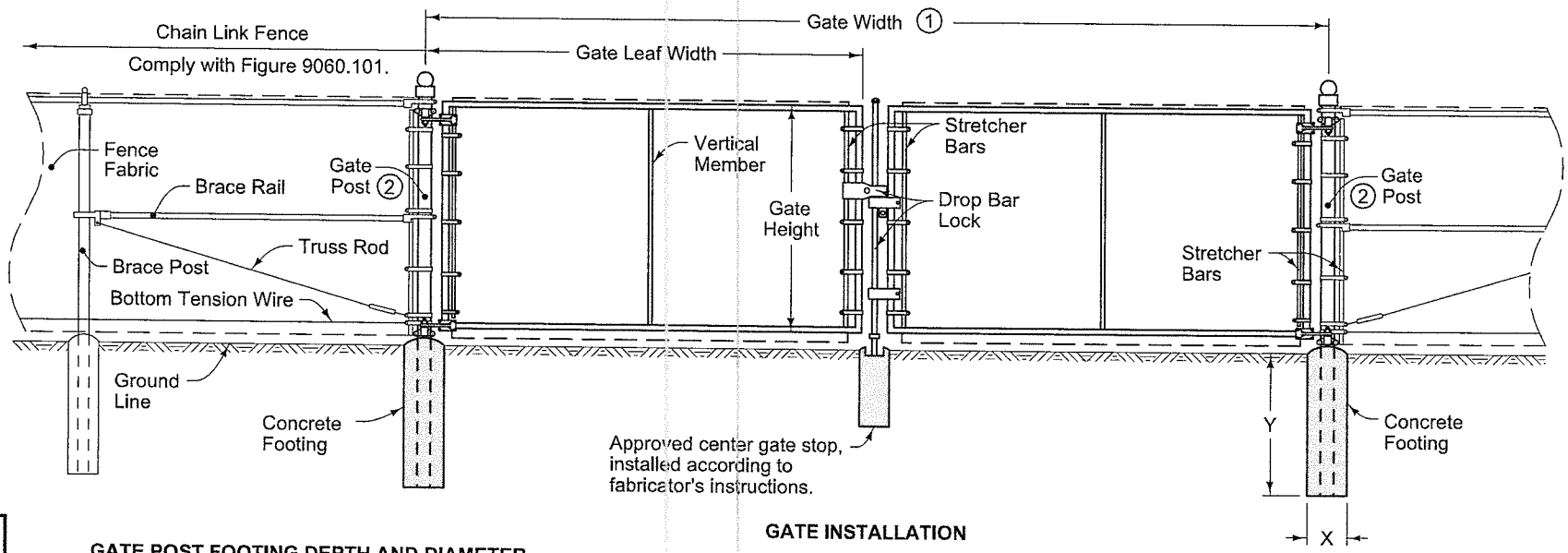

GATE INSTALLATION

GATE POST FOOTING DEPTH AND DIAMETER

GATE HEIGHT	GATE LEAF WIDTH	X	Y
6'-0" or less	4'-0" or less	0'-10"	3'-0"
6'-0" or less	over 4'-0" to 10'-0"	0'-12"	3'-0"
6'-0" or less	over 10'-0" to 18'-0"	1'-2"	3'-0"
over 6'-0"	6'-0" or less	0'-10"	3'-0"
over 6'-0"	over 6'-0" to 12'-0"	1'-0"	3'-0"
over 6'-0"	over 12'-0" to 18'-0"	1'-4"	3'-6"
over 6'-0"	over 18'-0" to 24'-0"	1'-6"	4'-0"

FIGURE 9060.102 SHEET 1 OF 1

SUDAS

REVISION New 10-18-11

9060.102

SHEET 1 of 1

SUDAS Standard Specifications

CHAIN LINK GATE